Twin Rotor MIMO System

GETTING STARTED

33-007-1M5

Feedback

Feedback Instruments Ltd, Park Road, Crowborough, E. Sussex, TN6 2QR, UK.
Telephone: +44 (0) 1892 653322, Fax: +44 (0) 1892 663719.
email: feedback@fdbk.demon.co.uk World Wide Web Homepage: http://www.fbk.com

Manual: 33-007-1M5 Ed01 980831 *Printed in England by FI Ltd, Crowborough*

Feedback Part No. 1160–330071M5

Notes

THE HEALTH AND SAFETY AT WORK ACT 1974

We are required under the Health and Safety at Work Act 1974, to make available to users of this equipment certain information regarding its safe use.

The equipment, when used in normal or prescribed applications within the parameters set for its mechanical and electrical performance, should not cause any danger or hazard to health or safety if normal engineering practices are observed and they are used in accordance with the instructions supplied.

If, in specific cases, circumstances exist in which a potential hazard may be brought about by careless or improper use, these will be pointed out and the necessary precautions emphasised.

While we provide the fullest possible user information relating to the proper use of this equipment, if there is any doubt whatsoever about any aspect, the user should contact the Product Safety Officer at Feedback Instruments Limited, Crowborough.

This equipment should not be used by inexperienced users unless they are under supervision.

We are required by European Directives to indicate on our equipment panels certain areas and warnings that require attention by the user. These have been indicated in the specified way by yellow labels with black printing, the meaning of any labels that may be fixed to the instrument are shown below:

CAUTION - RISK OF DANGER

Refer to accompanying documents

CAUTION - RISK OF ELECTRIC SHOCK

CAUTION - ELECTROSTATIC SENSITIVE DEVICE

PRODUCT IMPROVEMENTS

We maintain a policy of continuous product improvement by incorporating the latest developments and components into our equipment, even up to the time of dispatch.

All major changes are incorporated into up-dated editions of our manuals and this manual was believed to be correct at the time of printing. However, some product changes which do not affect the instructional capability of the equipment, may not be included until it is necessary to incorporate other significant changes.

COMPONENT REPLACEMENT

Where components are of a ‘Safety Critical’ nature, i.e. all components involved with the supply or carrying of voltages at supply potential or higher, these must be replaced with components of equal international safety approval in order to maintain full equipment safety.

In order to maintain compliance with international directives, all replacement components should be identical to those originally supplied.

Any component may be ordered direct from Feedback or its agents by quoting the following information:

1. Equipment type
2. Component value
3. Component reference
4. Equipment serial number

Components can often be replaced by alternatives available locally, however we cannot therefore guarantee continued performance either to published specification or compliance with international standards.

DECLARATION CONCERNING ELECTROMAGNETIC COMPATIBILITY

Should this equipment be used outside the classroom, laboratory study area or similar such place for which it is designed and sold then Feedback Instruments Ltd hereby states that conformity with the protection requirements of the European Community Electromagnetic Compatibility Directive (89/336/EEC) may be invalidated and could lead to prosecution.

This equipment, when operated in accordance with the supplied documentation, does not cause electromagnetic disturbance outside its immediate electromagnetic environment.

ACKNOWLEDGEMENTS

Feedback Instruments Ltd acknowledge all trademarks.

IBM, IBM - PC are registered trademarks of International Business Machines.

MICROSOFT, WINDOWS 95, WINDOWS 3.1 are registered trademarks of Microsoft Corporation.

MATLAB is a registered trademark of Mathworks Inc.

TABLE OF CONTENTS

1. Introduction

The **T**wo **R**otor **M**IMO **S**ystem (**TRMS**) is a laboratory set-up designed for control experiments. In certain aspects its behaviour resembles that of a helicopter. From the control point of view it exemplifies a high order non-linear system with significant cross-couplings. The approach to control problems connected with the TRMS proposed in this manual involves some theoretical knowledge of laws of physics and some heuristic dependencies difficult to express in analytical form. A schematic diagram of the laboratory set-up is shown in Figure 1-1.

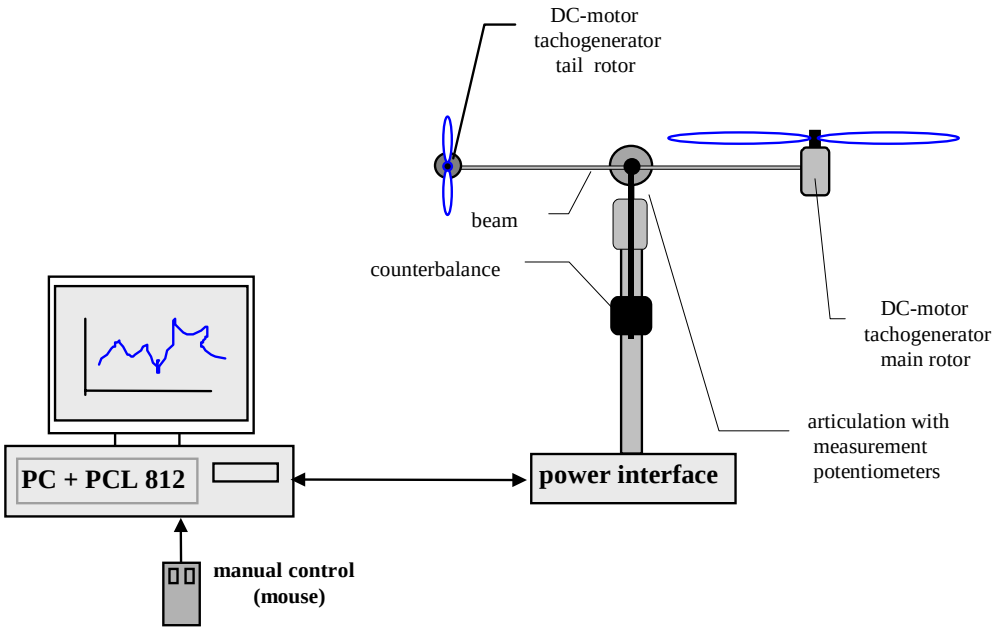

Figure 1-1: The laboratory set-up: helicopter-like system

The TRMS consists of a beam pivoted on its base in such a way that it can rotate freely both in the horizontal and vertical planes. At both ends of the beam there are rotors (the main and tail rotors) driven by DC motors. A counterbalance arm with a weight at its end is fixed to the beam at the pivot. The state of the beam is described by four process variables: horizontal and vertical angles measured by position sensors fitted at the pivot, and two corresponding angular velocities. Two additional state variables are the angular velocities of the rotors, measured by tachogenerators coupled with the driving DC motors.

In a normal helicopter the aerodynamic force is controlled by changing the angle of attack. The laboratory set-up from Figure 1-1 is so constructed that the angle of attack is fixed. The aerodynamic force is controlled by varying the speed of rotors. Therefore, the control inputs are supply voltages of the DC motors. A change in the voltage value results in a change of the rotation speed of the propeller which results in a change of the corresponding position of the beam.

However, significant cross-couplings are observed between the actions of the rotors; each rotor influences both position angles.

The design of stabilising controllers for such a system is based on de-coupling. For a de-coupled system an independent control input can be applied for each co-ordinate of the system.

An IBM-PC compatible computer can be used for real-time control of the TRMS. The computer must be supplied with an interface board (PCL-812 in this case). Figure 1-2 shows details of the hardware and software configuration of the control system for TRMS.

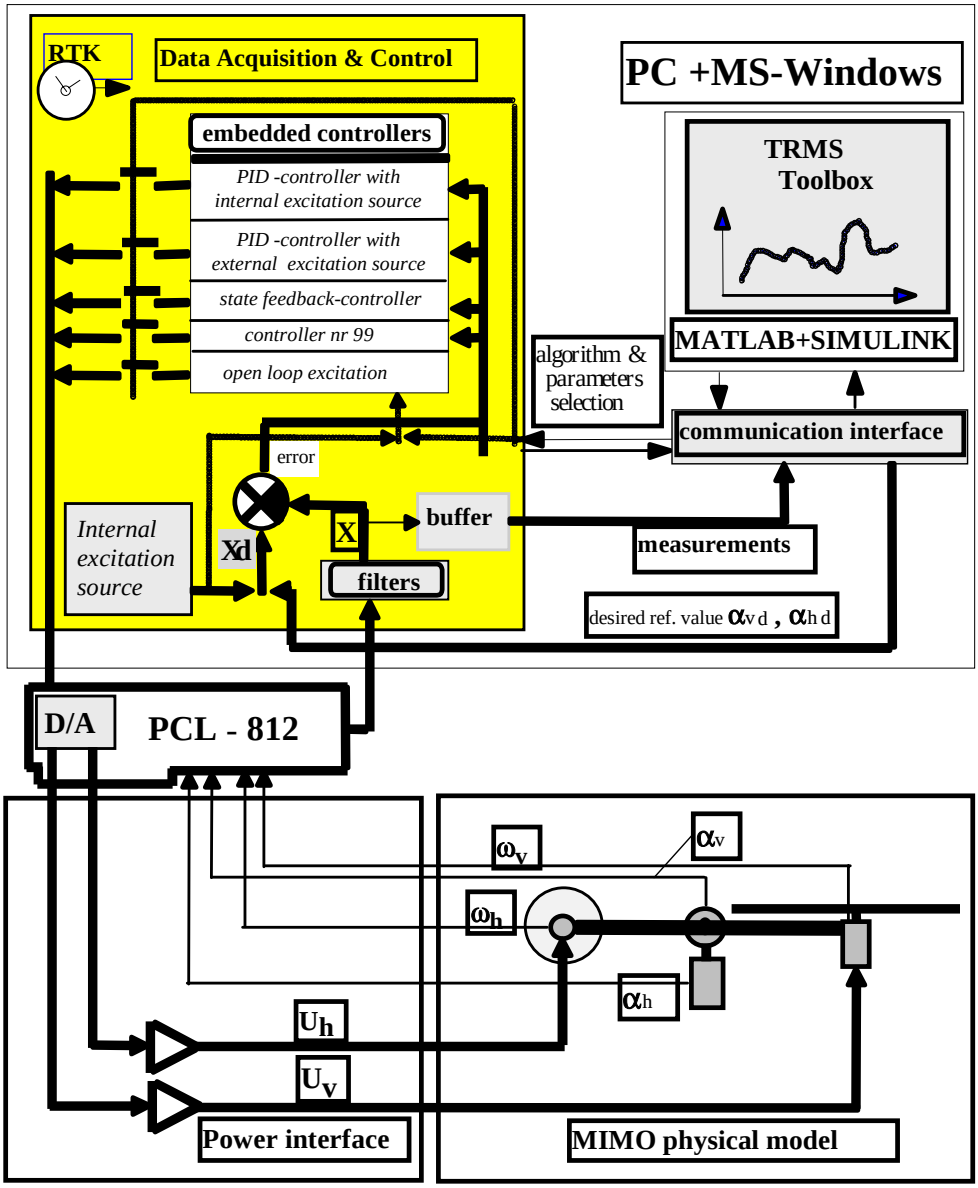

Figure 1-2: Hardware and software configuration of the TRMS

The MS-Windows 95/NT environment was adapted to run control tasks of TRMS in real-time.

The control software for the TRMS consists of:

- **Real-time kernel (RTK),**
- **TRMS Toolbox.**

The Real-time kernel supervises real-time tasks creating a feedback control structure (Figure 1-2).

The TRMS Toolbox is a collection of M-functions and C-code DLL-files that extends the MATLAB environment in order to solve TRMS modelling, design and control problems. A special memory buffer and communication interface are created in order to make process data flow between the real-time kernel and MATLAB environment possible. See the Reference Manual - 37-007-2 for a description of the toolbox structure and functions.

The integrated software supports all the phases of the development of a control system.

- on-line process identification,
- control system modelling, design and simulation,
- real-time implementation of control algorithms.

The *TRMS Toolbox* is intended to provide a user with a variety of software tools to allow:

- on-line information flow between the process and the MATLAB environment,
- real-time control experiments using embedded algorithms,
- development, simulation and application of user-defined control algorithms.

1.1. HARDWARE AND SOFTWARE REQUIREMENTS.

The TRMS Toolbox is distributed in compressed format on a floppy disk or CD-ROM. The Installation procedure is a standard one applied for Feedback MATLAB compatible products (see Installation Guide – 33-000M5 for details). A full set of software and manuals consists of:

- 3.5" 1.44 Mb Disk or CD-ROM,
- TRMS - Installation and Commissioning - 33-007-0M5
- TRMS - Getting Started (this manual) - 33-007-1M5
- TRMS - Reference Guide - 33-007-2M5
- TRMS - External Interface, - 33-007-3M5
- TRMS - Advanced Teaching Manual 1 - 33-007-4M5
- TRMS - Advanced Teaching Manual 2 - 33-007-5M5 (To be announced)
- Software Installation Guide. - 33-000M5

Minimum Configuration

The following minimum configuration is required:

Hardware: TRMS from *Feedback Ltd*, PC-compatible computer working with MATLAB 5 version equipped with PCL-812 PG or RT-DAC board.

The *TRMS Toolbox* uses a standard PC hardware platform and the standard Microsoft Windows 95, or NT operating system, and *minimum* MATLAB 5.1, Simulink 2.1, Control and Signal Processing Toolboxes.from the Mathswork Inc. Certain specialised controllers, developed in future Teaching Manual releases, may require the use of *additional* MATLAB toolboxes. An appropriate C compiler is required for use of the External Interface.

Application note

The documentation assumes that the user has a basic experience with MATLAB and SIMULINK from *MathWorks Inc.,* and Windows 95, 98 or NT operating software.

2. Starting , Testing And Stopping Procedures

2.1. STARTING PROCEDURE

In the MS-WINDOWS 9995 or NT environment invoke MATLAB by double clicking on the MATLAB icon. The MATLAB Command Window opens. Then simply type:

hl

after which the Main Control Window of the TRMS opens (Figure 2-1)

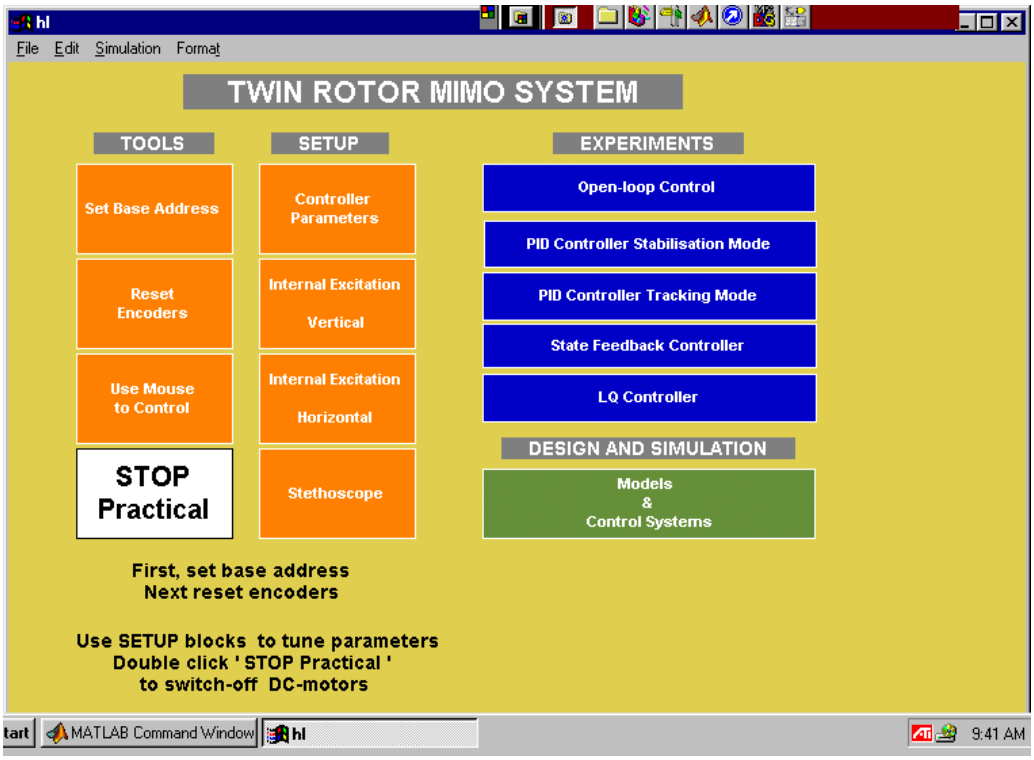

Figure 2-1: The Main Control Window

Go through the following steps:

- Double click on the ***Set Base Address block***. If your data acquisition board address agrees with the default value then accept it. Otherwise type the address that you set on the PCL812 board during the installation (Figure 2-2)

Note: Input of any number other than the correct address or zero will cause the system to hang

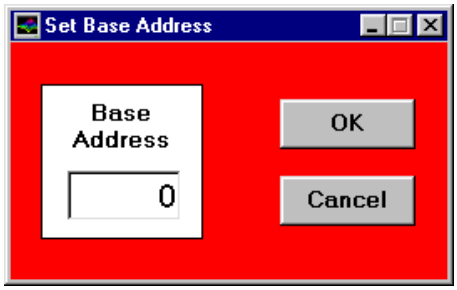

Figure 2-2: Set base address window

- Switch on the motors with the switch mounted on the remote switch unit.
- Move the TRMS beam manually into the neutral position
- Holding the beam double click on the ***Reset Encoders block***.

2.2. TESTING AND TROUBLESHOOTING

Now you are ready to start experiments. First go through the following steps to avoid damaging your hardware:

- Double click on the ***Open Loop Control*** block. The following window (Figure 2-3) appears:

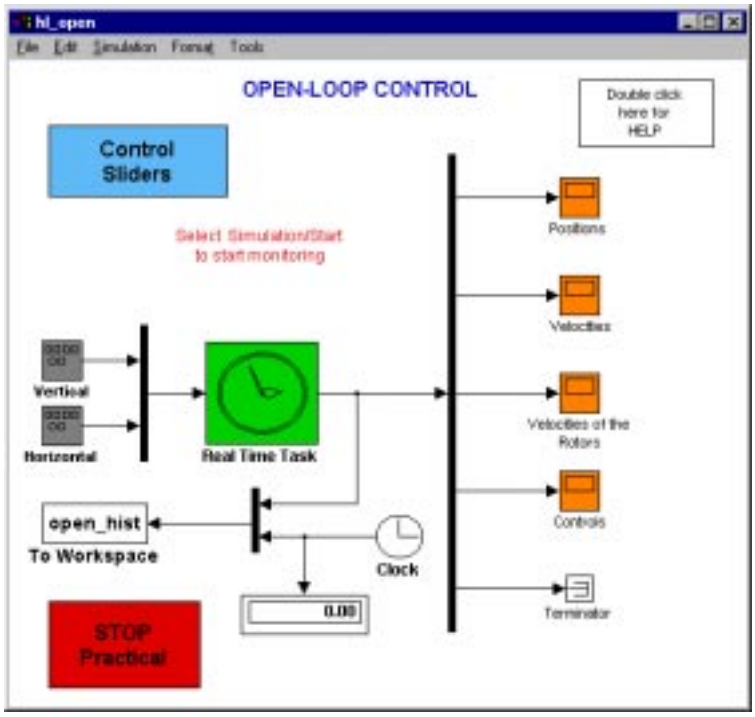

Figure 2-3: Window of the *Open Loop Control* block

- Open the position scope (to observe position angles of TRMS) and control scope (to observe control signals). You can configure this screen by closing or opening scopes, moving them and changing their dimensions,

- Check if the measurements of the angles describing the TRMS position are displayed by the computer. Click on the ***Simulation*** menu and click the ***Start*** bar. Slowly move the beam vertically in both directions by hand (do not change horizontal position). The results of this action should be visible in the scopes on the screen (see Figure 2-4). Then fix the vertical angle and move TRMS in the horizontal plane by hand from one limit to the other and observe the scopes. You can verify if the measurements are correct.

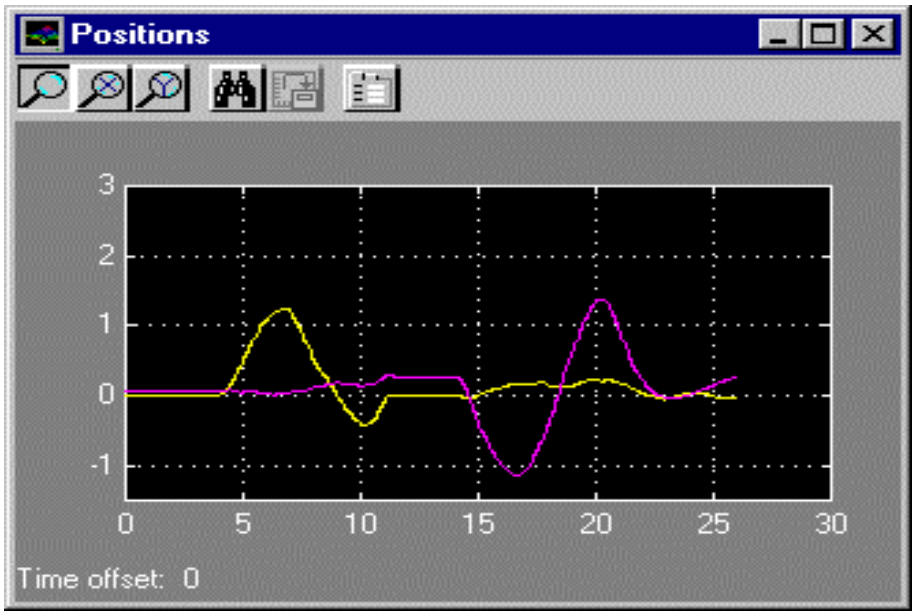

Figure 2-4: Testing the measurements. The DC motors are off

- Open the ***Velocities of the Rotors scope.***

- Next check if the control of the rotor movement is possible. For this purpose fix the beam by hand and double click on the ***Control slider*** block. The following window opens (Figure 2-5):

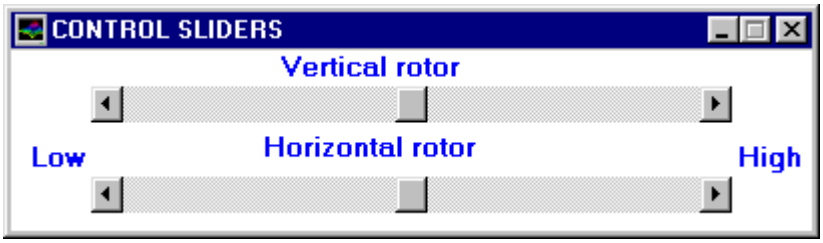

Figure 2-5: Control Sliders

- By dragging the ***Vertical*** *rotor* slider from zero to the *low* position you should observe that the main rotor begins to rotate clockwise (as seen from above). Dragging the ***Vertical*** *rotor* slider from zero to high should result in counter-clockwise rotation of the main rotor,

- Repeat this same experiment, dragging the ***Horizontal*** *rotor* slider.

When the system is working properly you will see plots appropriate to your actions in the scopes.
Below, we give a number of hints to avoid most common faults that can occur during the first experiments with the system (see Table 2.1).

Table 2.1. Troubleshooting

Faulty action	Solution
No signals are observed on the screen or the behaviour of the system is uncontrolled.	Refer to the Hardware Installation in the Installation and Commissioning manual 33-007-0
Constant value signals are observed or MS-WINDOWS system has failed	Double click on ***Set PCL-812*** *Base Address* block (*Main Control Window*). Check the address of your PCL-812 board. Double click on the ***Reset Encoders*** block
If you repeat the test after a certain period of time and the signals are not correct	Check if all parts of the system are fitted and screwed tightly.
An unexpected behaviour of the model has occurred	Check correctness of measurements. If necessary reset the encoders.
MS-WINDOWS system fails after starting one of the control algorithms	Call ***hl_call('SetSampleTime',new_value).*** Your computer is too slow to perform this action. Increase the *new_value*.
The following time diagram appears, no matter what the real motion of the system was. 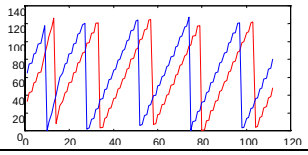	Base address of your PCL-812 board is set to zero. Double click on the ***Set PCL-812 Base Address*** block (*Main Control Window*). Check the address of your PCL-812 board.
After starting simulation all signals have the expected correct shapes but switching of the DC motor results in unpredictable behaviour of the system.	Check the hardware

2.3. STOPPING PROCEDURE

The practical may be stopped at any time.

Double click on the ***Stop Practical*** block in the *Main Control Window*.

If you wish to stop the visualisation process click once on the ***Stop*** bar in the *Simulation* menu.

Notes

3. Menu Description

The Main Control Window shown in Figure 2-1 contains three groups of menu buttons:

TOOLS **SETUP** **DEMOS**

And additionally

DESIGN AND SIMULATION Button

These are described in the following pages.

3.1. TOOLS GROUP

The buttons in the TOOLS group perform the following tasks:

Set Address -	sets the base address of the I/O board (PCL-812 or RT-DAC)
Reset Encoders -	fixes “zero” for encoders which read position of the beam.
Use Mouse to Control -	gives possibility of using the mouse to generate control or reference signal,
Stop Practical -	stops actual background control task.

3.2. SETUP GROUP

The respective buttons from the SETUP group perform the following tasks:

Controller parameters - displays the parameters of embedded controllers (PID, State-feedback and LQ). The window can be used to select controller and set its parameters before or during the experiment (Figure 3-1).

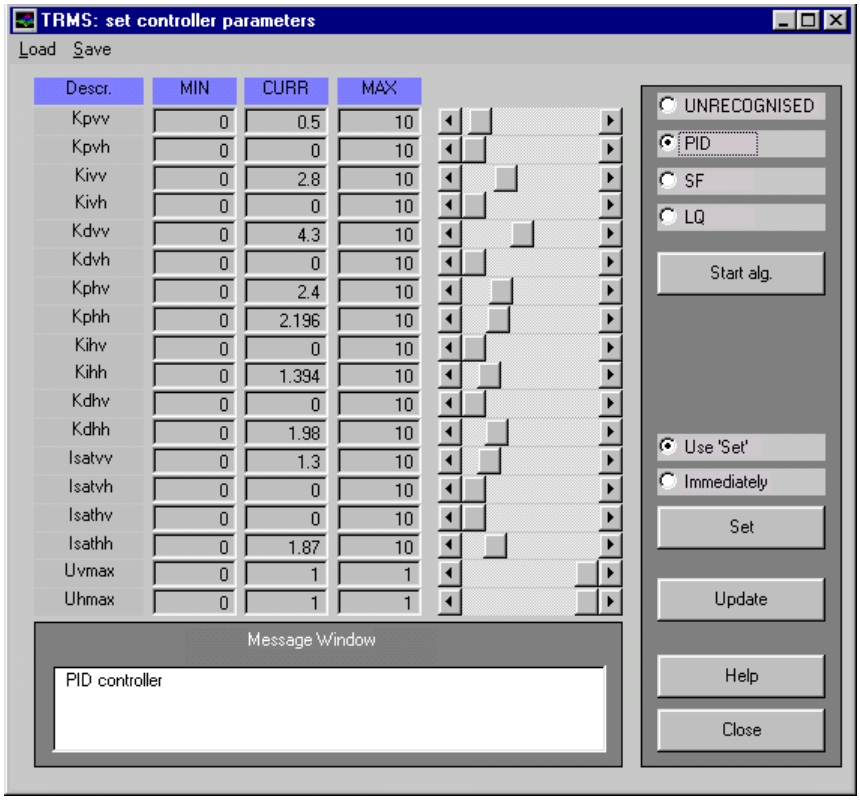

Figure 3-1: *Controller parameters* window (PID controller is selected)

If an arbitrary algorithm is running and next this window is opened then the algorithm is marked (the black dot) with the current active values of parameters. If none of the algorithms is running then the UNRECOGNISED button is marked without any visible parameters.
You can select the type of the algorithm by clicking the PID, SF or LQ radio-button. Each algorithm has its own set of the default parameters. This set appears automatically when the TRMS is being controlled by any one of the three controllers. You can change parameters by typing appropriate value or by dragging the slider.

When *Use 'Set'* button is selected the parameters are passed to the RTK after clicking *Set* button. When *Immediately* button is selected each change is passed to the RTK immediately.

Any set of parameters previously saved can be loaded using *Load* menu option. The default parameters are loaded from the *hl_cpar.mat* file for inactive algorithms. The parameters for the active algorithm (working in the background) are loaded from the RTK. *Update* button is used to show current parameters of RTK. If you click the *Update* button then the parameters window is updated. It means that current values of parameters from RTK are transmitted to the parameters window. Therefore all changes introduced lately outside the visible window, for example: in the MATLAB Command Window, etc. are transmitted to that window. If you mark a control algorithm and click the *Start alg.* button then the new control algorithm will be chosen and it will start.

Internal Excitation Vertical / (Horizontal) - opens the window to set the shape and parameters of the signals from the internal excitation generator (Figure 3-2).

If an arbitrary internal excitation generator is running in RTK and next this window is opened then the shape of the excitation is marked (the black dot) with the current active values of parameters. If not then the *Constant* radio-button is marked.

Here you can set parameters of the internal excitation source. This window allows you to select the shape of the wave generated by the internal excitation source and to set parameters of this wave.

If the *Use Set* radio-button is marked then the modification of the signal parameters consists of two steps. First, you can introduce necessary changes in the parameter values. Next, you must activate the new values clicking the *Set* button.

When *Immediately* radio-button is selected each change is passed directly to the RTK immediately after change of any parameter without acknowledgement.

Update button is used to show current parameters of the recently set excitation signal (in RTK). If you click the *Update* button then the parameters of recently set signal are updated. All changes done outside the visible window are transferred to the window.

You can save the current set of parameters using *Save* menu option. Any set of parameters previously saved can be loaded using *Load* menu option.

The signals generated by the internal excitation source are interpreted as control input if the system is in the open-loop mode or as reference signal if the system is in the closed-loop mode.

The UNRECOGNISED shape is marked in the case of an incorrect usage of the *hl_call('setpw',arg)* function (see Reference Manual – 33-007-2M5), for example: in the *MATLAB Command Window*, etc are transmitted to that window.

See the Reference Manual - 33-007-2M5, for details of the signal parameters.

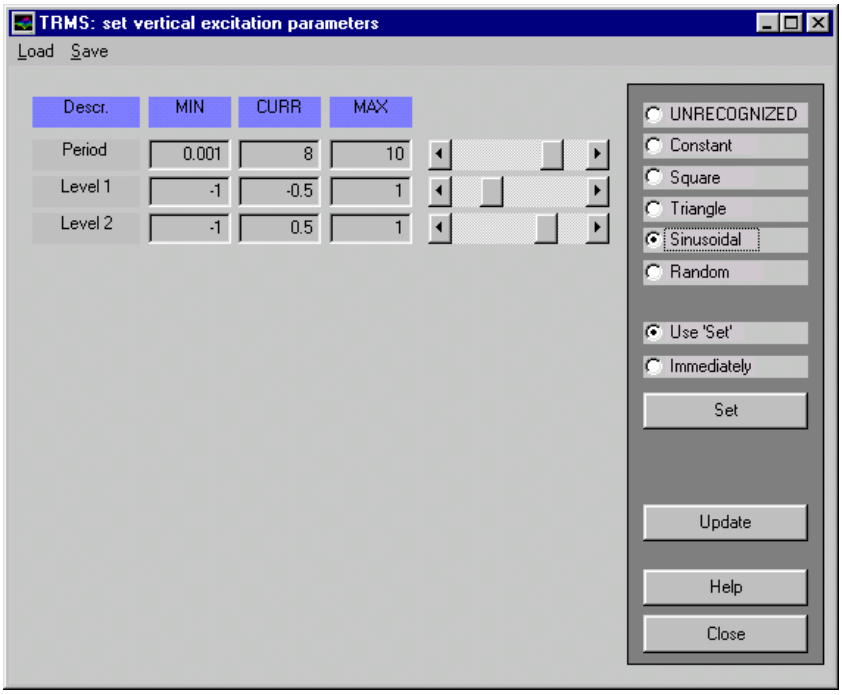

Figure 3-2: *Internal Excitation Vertical* (parameters) window (sinusoidal wave is selected)

Stethoscope - allows all measured signals in the TRMS system to be observed. After clicking the button, the following window appears (Figure 3-3).

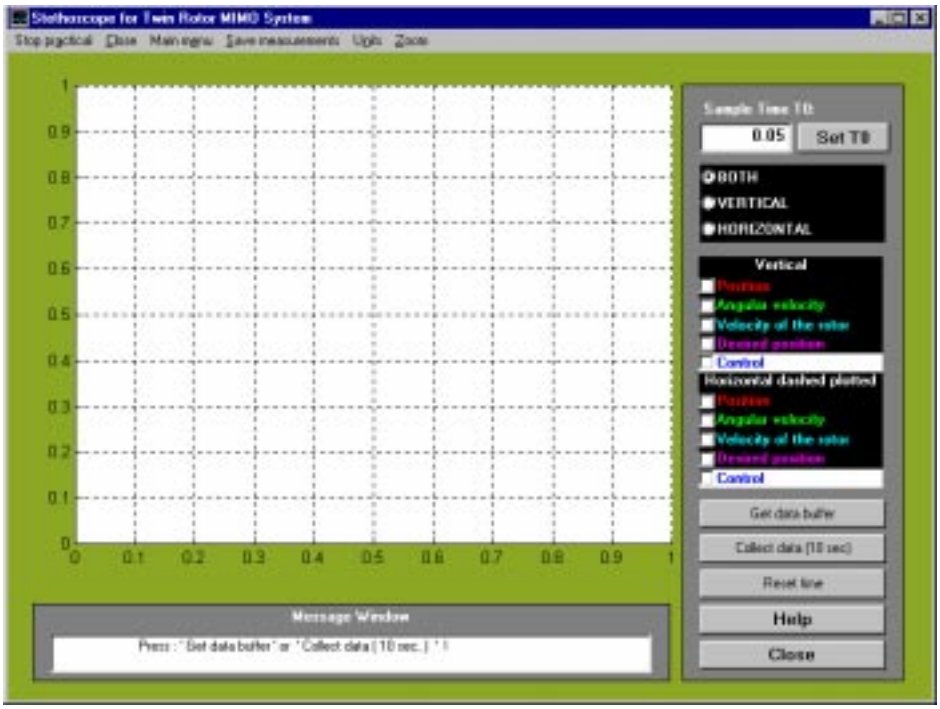

Figure 3-3: *Stethoscope* window

The Stethoscope is designed to read and plot real-time data and provides the following functions:

- set sample time,
- read contents of the data acquisition buffer,
- clear buffer and collect data for 10 seconds,
- plot the following data (using check boxes) for vertical and/or horizontal planes:
  - ♦ positions of the beam,
  - ♦ angular velocities of the beam,
  - ♦ desired positions,
  - ♦ velocities of the rotors,
  - ♦ control signals.

The push-buttons, visible on the right hand side of Figure 3-3, relate to the following actions:

Sample Time T0	- sampling time setting
Set T0	- transfer T0 to RTK
Get data buffer	- send data to MATLAB and display marked data
Collect data (10 s)	- 10 sec data acquisition
Help	- show short help
Close	- close window.
Reset time	- set time to zero.

3.3. EXPERIMENTS GROUP

The window which appears after clicking one of the buttons in the EXPERIMENTS group has a similar structure to other windows in this group. Hence only one representative example is described. That is the *PID controller - tracking mode* window (Figure 3-4).

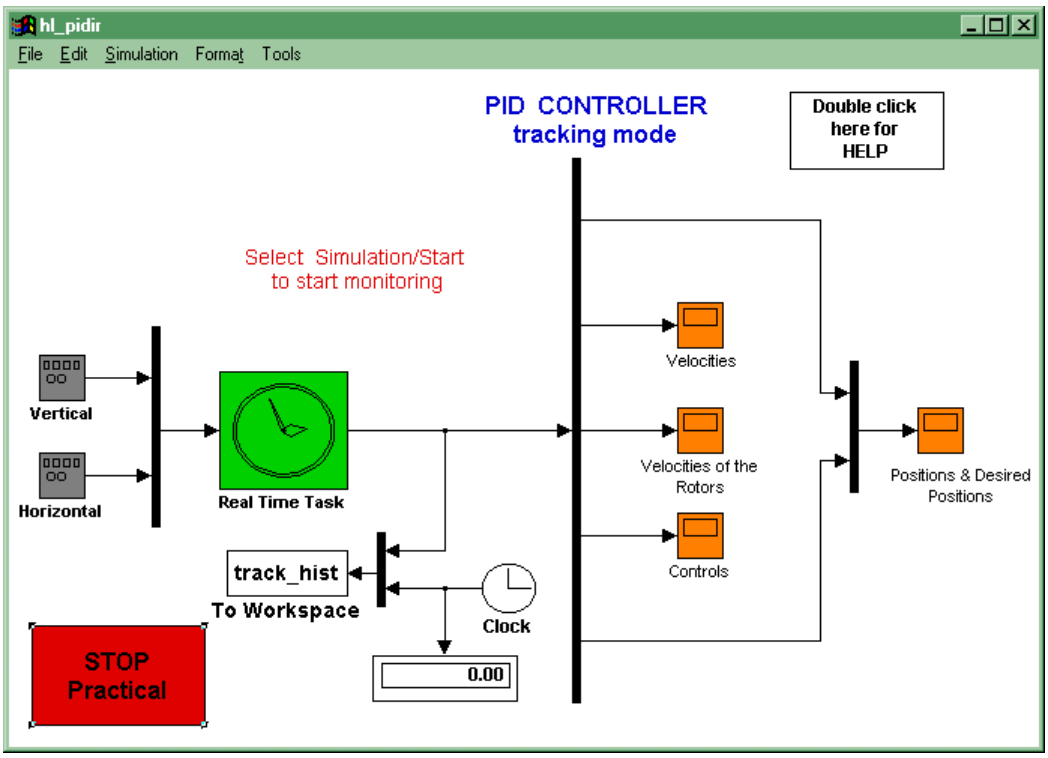

Figure 3-4: *PID Controller - tracking mode* window

You can get access to all parameters of Real Time Task. After double clicking on the *Real Time Task* block the following mask with parameters opens in this case (Figure 3-5):

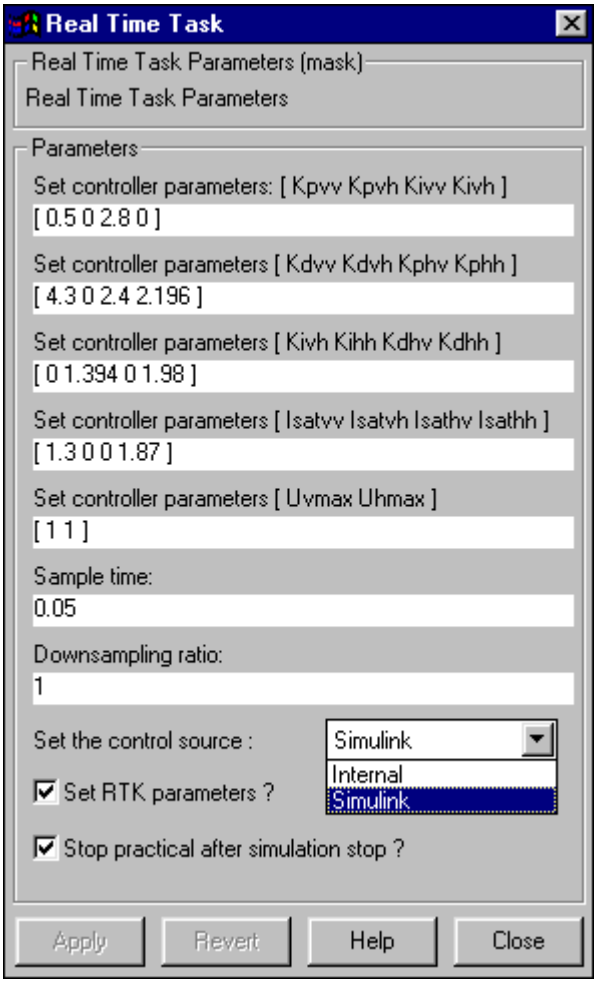

Figure 3-5: Mask of the *Real Time Task* block for the Simulink model from Figure 3-4.

1. *Set the control source* allows the setting up (definition) of the input source. This can be provided by:

   Simulink change desired position parameters in signal generator block called vertical / horizontal.

   Internal change desired position parameters in the two blocks positioned under Setup menu in the Main Matlab Control window. The blocks are Internal Excitation to set the desired position for the vertical propeller, and Internal Excitation Horizontal for the horizontal propeller

2. A number, *Downsampling ratio,* field defines the number of samples to be omitted between two samples plotted on the screen.

3. If the *Stop practical after simulation stop* check box is marked practical is stopped when the *Simulation/Stop* bar in the model in Figure 3-4 is clicked. Otherwise use the *Stop Practical* button from the main Control Window.

4. If *Set RTK parameters* is marked parameters from mask are transferred to RTK after start experiment

5. Real Time experiments are started by selecting *Simulation – Start* from the top bar menu

In this mask you can set all 18 parameters of PID controller and transfer them to the RTK.

3.4. DESIGN AND SIMULATION GROUP

The window which appears after clicking on the *Models & Control Systems* button in the *Design And Simulation* group is shown in Figure 3-6. A description of this window is given in the Advanced Teaching Manual - 33-007-4M5.

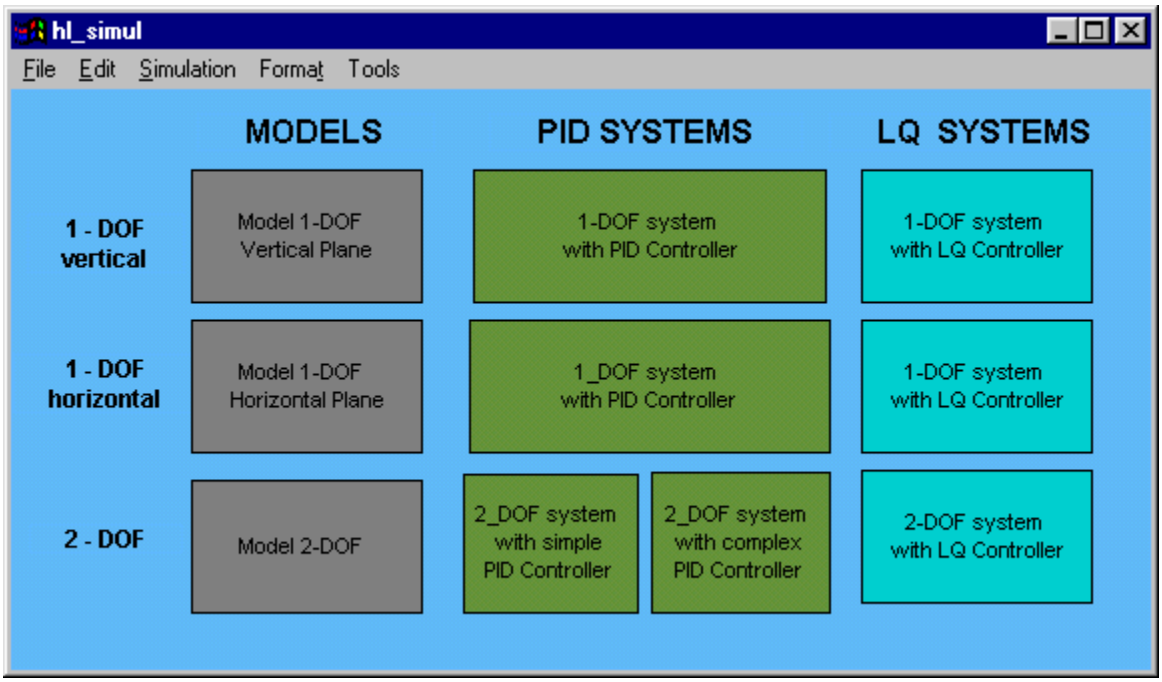

Figure 3-6: *Models & Control Systems* window.

4. Model And Parameters

Modern methods of design and adaptation of real time controllers require high quality mathematical models of the system. For high order, non-linear cross-coupled systems classical modelling methods (based on Lagrange's equations) are often very complicated. That is why we decided to use a simpler approach, which is based on block diagram representation of the system, and is very suitable for use in the SIMULINK environment.

A block diagram of the TRMS model shown in Figure 4-1. The control voltages U_h and U_v are inputs to the DC-motors which drive the rotors. The model of the DC motor with propeller is composed of a linear dynamic system followed by a static nonlinearity. The linear part is in the form of first order transfer functions - $G_h = 1/(T_h S + 1)$ and $G_v = 1/(T_v S + 1)$. The non-linear functions $h(U_h)$ and $v(U_v)$ are static characteristics of the DC-motors with propellers. The input voltage is limited to the range +/- 10 volts. The nonlinear relations between the rotor's velocity and the resulting aerodynamic force can be approximated by the quadratic functions : $F_h = \mathrm{sign}(\omega_h)\, k_h\, \omega_h^2$ and $F_v = \mathrm{sign}(\omega_v)\, k_v\, \omega_v^2$, ($k_h$ and k_v are positive constants).

Note: It is important that the geometrical shape of the propellers is not symmetric, so that the behaviour in one direction is different from that in the other direction.

Rotation of a propeller produces an angular momentum which, according to the law of conservation of angular momentum, must be compensated by the remaining body of the TRMS beam. This results in the interaction between two transfer functions, represented by the moment of inertia of the motors with propellers J_{hv} and J_{vh} in Figure 4-1. This interaction directly influences the velocities of the beam in both planes. The forces F_h and F_v multiplied by the arm length $l_h(\alpha_v)$ and l_v are equal to the torques acting on the arm.

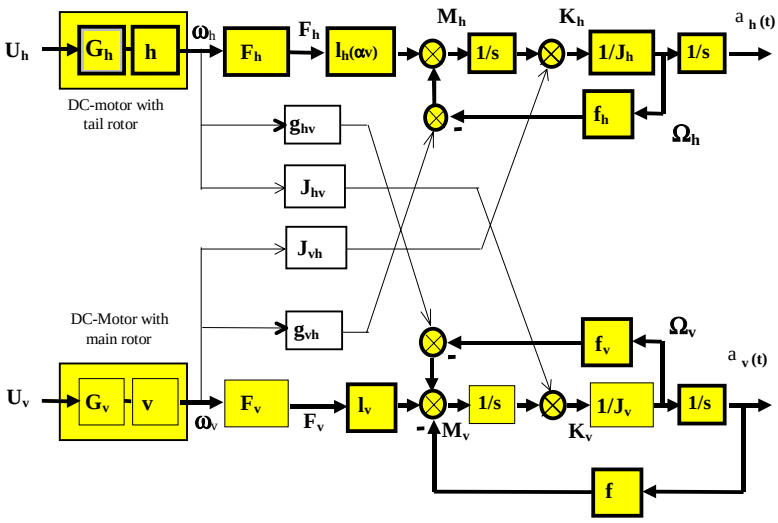

Figure 4-1: Block diagram of the TRMS model

The following notation is used in Figure 4-1:

α_h	horizontal position (azimuth position) of TRMS beam	[rad]
Ω_h	angular velocity (azimuth velocity) of TRMS beam	[rad/s]
U_h	horizontal DC-motor voltage control input	[V]
G_h	linear transfer function of tail rotor DC-motor;	
h	non-linear part of DC-motor with tail rotor: $h(U_h) = \omega_h$	[rad/s]
ω_h	rotational speed of tail rotor	[rad/s]
F_h	non-linear function (quadratic) of aerodynamic force from tail rotor $F_h = F_h(\omega_h)$ [N]	
l_h	effective arm of aerodynamic force from tail rotor $l_h = l_h(\alpha_v)$	[m]
J_h	non-linear function of moment of inertia with respect to vertical axis, $J_h = J_h(\alpha_v)$	[kg m^2]
M_h	horizontal turning torque	[Nm]
K_h	horizontal angular momentum	[N m s]
f_h	moment of friction force in vertical axis	[N m]
α_v	vertical position (pitch position) of TRMS beam	[rad]
Ω_v	angular velocity (pitch velocity) of TRMS beam	[rad/s]
U_v	vertical DC-motor voltage control input	[V]
G_v	linear transfer function of main rotor DC-motor ;	
v	non-linear part of DC-motor with main rotor $v(U_v) = \omega_v$	[rad/s]
ω_v	rotational speed of main rotor	[rad/s]
F_v	non-linear function (quadratic) of aerodynamic force from tail rotor $F_v = F_v(\omega_v)$	[N]
l_v	arm of aerodynamic force from main rotor	[m]
J_v	moment of inertia with respect to horizontal axis	[kg m^2]
M_v	vertical turning moment	[Nm]
K_v	vertical angular momentum	[N m s]
f_v	moment of friction force in horizontal axis	[N m]
f	vertical turning moment from counterbalance $f = f(\alpha_v)$	[N m]
J_{hv}	vertical angular momentum from tail rotor	[N m s]
J_{vh}	horizontal angular momentum from main rotor	[N m s]
g_{vh}	non-linear function (quadratic) of reaction turning moment $g_{vh} = g_{vh}(\omega_v)$	[N m]
g_{hv}	non-linear function (quadratic) of reaction turning moment $g_{hv} = g_{hv}(\omega_h)$	[N m]
t	time	[s]
$1/s$	transfer function of an integrator.	

Controlling the system consists in stabilising the TRMS beam in an arbitrary, within practical limits, desired position (pitch and azimuth), or making it track a desired trajectory. Both goals may be achieved by means of appropriately chosen controllers. The user can select between a PID, State Feedback (SF), or LQ controller.

5. Controllers

In the following section we propose three types of controllers: PID, State Feedback (SF) and LQ which are installed as embedded controllers in the RTK. It is possible to tune the parameters of the controllers without any analytical design. Such an approach to the control problem seems to be reasonable, if a well identified model of the TRMS is not available.

Note that user-defined control algorithms can be added to the RTK. See the External Interface manual, 33-007-3M5 for details. However this approach is suggested for more advanced users.

5.1. CONTROLLERS

5.1.1. 1-DOF and 2-DOF

The one degree of freedom (1-DOF) control problem can be formulated as follows.

Design a controller that will stabilise the system, or make it follow a desired trajectory in one plane (one degree of freedom) while motion in the other plane is blocked mechanically or being controlled by another controller. If the TRMS is free to move in both axes, we refer to the control as two degrees of freedom (2-DOF).

You can construct four PID controllers for TRMS: PID_{vv}, PID_{vh}, PID_{hv} and PID_{hh} (h-horizontal, v-vertical). The subscripts indicates the source-sink relation of the controller. Each control signal (U_v and U_h) is the sum of two controller outputs. For example, vertical control denoted later as U_v is the sum of two output signals: PID_{vv} and PID_{hv}. The internal structure of each PID controller is shown in Figure 5-1a.

There are three parameters to be set for every controller: K_P, K_i and K_d or equivalently as defined in Figure 5-1b - K, $1/T_i$ and T_d.

The TRMS control in the vertical and horizontal planes requires setting altogether 12 (3×4) controller parameters. Saturation blocks introduce four additional I_{sat} parameters: I_{vvsat}, I_{vhsat}, I_{hhsat} and I_{hvsat}, which are the limits of absolute values of the integrals of errors, and two: U_{hmax} and U_{vmax} parameters, which are the limits of absolute value of controls.

These 18 (12+4+2) parameters have their default values. They can be tuned independently by sliders, as described in section 5-4.

5.1.2. State feedback controller

We assume that the control objective is to stabilise the position of the system at the equilibrium point: $(\alpha_{vd},0,\alpha_{hd},0)$, where α_{vd} and α_{hd} are constant reference values of the vertical and horizontal angles with both angular velocities of the beam equal to zero. Hence, the SF controller can be expressed in the form:

$$
\begin{aligned}
U &= K_1\varepsilon_v + K_2\Omega_v + K_3\varepsilon_h + K_4\Omega_h \\
\varepsilon_v &= \alpha_{vd} - \alpha_v \\
\varepsilon_h &= \alpha_{hd} - \alpha_h \\
\Omega_h &= d\alpha_h / dt \\
\Omega_v &= d\alpha_v / dt
\end{aligned}
$$

where U, $K_1,\ldots,K_4$ are two-dimensional vectors i.e. (K_{v1}, K_{v2}, K_{v3}, K_{v4}) and (K_{h1}, K_{h2}, K_{h3}, K_{h4}) relating to vertical and horizontal motions. The first co-ordinates U_V, $K_{V1},\ldots,K_{V4}$ of each vector correspond to vertical motion. Therefore there are eight basic parameters of the proportional state feedback controller.

Similarly as in the PID case we can introduce the saturation limits: U_{vmax} and U_{hmax} for the absolute values of U_v and U_h controls.

If we apply a controller for TRMS then we obtain a closed-loop system which is stabilised. Such a system subject to constant inputs can be considered as a free or unforced system described by the set of homogeneous differential equations:

$$\frac{dx(t)}{dt} = f(t, x(t)), x(t_0) = x_0, f(t,0) = 0 \text{ for all } t$$

where $x(t)\in\mathbf{R}^n$, $t\in[0,\infty)$, the non-linear function f is sufficiently smooth. The equilibrium state of the above system and the null solution to the equation are considered as equivalent. The properties of stability are ***local***. That is, it is only known that there exists some domain in the state space surrounding the equilibrium point such that all solutions initiating in that domain are stable. To realise the goal of control we require satisfying an even stronger condition i.e., asymptotic stability which guarantees that any motion returns to the equilibrium whatever the initial perturbation might be.

As long as the function f is not well identified, asymptotic stability must be checked by experiments. It means that parameters of a controller are selected experimentally to stabilise the system at the equilibrium point.

5.1.3. Linear Quadratic Controller

An introduction to the LQ Controller will be found in the Advanced Teaching Manual 2 (33-007-5M5) to be released in the First Quarter of 1999.

5.2. 1-DOF AND 2-DOF PID CONTROLLER

The structure of the cross-coupled multi-variable PID controller is shown in Figure 5-1.

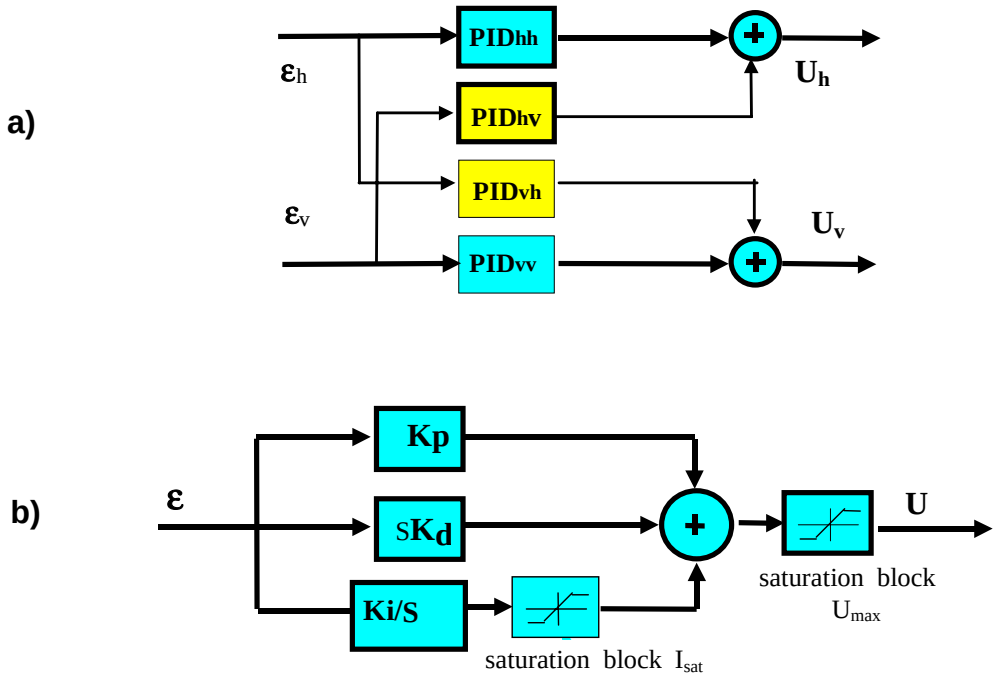

Figure 5-1: Structure of the cross-coupled PID controller.

a) general b) single PID block

The controller is described by the equations given below.

$$U_v = K_{pvv}\varepsilon_v + I_{vv}(t) + K_{dvv}\frac{d\varepsilon_v}{dt} + K_{pvh}\varepsilon_h + I_{vh}(t) + K_{dvh}\frac{d\varepsilon_h}{dt}, \quad \text{for } -U_{v\max} \le U_v \le U_{v\max}$$

$$if\,(U_v > U_{v\max})\ then\ U_v = U_{v\max},\ if\,(U_v < -U_{v\max})\ then\ U_v = -U_{v\max},$$

$$U_h = K_{phv}\varepsilon_h + I_{hv}(t) + K_{dhv}\frac{d\varepsilon_v}{dt} + K_{phh}\varepsilon_h + I_{hh}(t) + K_{dhh}\frac{d\varepsilon_h}{dt}, \quad \text{for } -U_{h\max} \le U_h \le U_{h\max}$$

$$if\,(U_h > U_{h\max})\ then\ U_h = U_{h\max},\ if\,(U_h < -U_{h\max})\ then\ U_h = -U_{h\max},$$

where $K_{pvv}, K_{pvh}, K_{phv}, K_{phh}, K_{dvv}, K_{dvh}, K_{dhv}, K_{dhh}$ are the proportional and derivative parameters of the controllers,

$I_{vv}, I_{vh}, I_{hv}, I_{hh}$ are the absolute values of the integral errors. The controller parameters have been chosen by trial and error

$U_{v\max}, U_{h\max}$ are the saturation limits of the vertical and horizontal controls.

$$\varepsilon_v = \alpha_{vd} - \alpha_v,$$

$$\varepsilon_h = \alpha_{hd} - \alpha_h,$$

where: $\varepsilon_v, \varepsilon_h$ are errors of vertical and horizontal angle, α_{vd}, α_{hd} are desired values of the vertical and horizontal angles and α_v, α_h are the actual vertical and horizontal angles.

The integrators are described by the following equations:

$$I_{vv}(t) = K_{ivv}\int_0^t \varepsilon_v dt, \quad for - I_{vvsat} \le I_{vv} \le I_{vvsat} \text{ subject to,}$$
$$if\,(I_{vv} > I_{vvsat})\ then\ I_{vv} = I_{vvsat},\ if\,(I_{vv} < -I_{vvsat})\ then\ I_{vv} = -I_{vvsat},$$

$$I_{vh}(t) = K_{ivh}\int_0^t \varepsilon_v dt, \quad for - I_{vhsat} \le I_{vh} \le I_{vhsat} \text{ subject to,}$$
$$if\,(I_{vh} > I_{vhsat})\ then\ I_{vh} = I_{vhsat},\ if\,(I_{vh} < -I_{vhsat})\ then\ I_{vh} = -I_{vhsat},$$

$$I_{hv}(t) = K_{ihv}\int_0^t \varepsilon_h dt, \quad for - I_{hvsat} \le I_{hv} \le I_{hvsat} \text{ subject to,}$$
$$if\,(I_{hv} > I_{hvsat})\ then\ I_{hv} = I_{hvsat},\ if\,(I_{hv} < -I_{hvsat})\ then\ I_{hv} = -I_{hvsat},$$

$$I_{hh}(t) = K_{ihh}\int_0^t \varepsilon_h dt, \quad for - I_{hhsat} \le I_{hh} \le I_{hhsat} \text{ subject to,}$$
$$if\,(I_{hh} > I_{hhsat})\ then\ I_{hh} = I_{hhsat},\ if\,(I_{hh} < -I_{hhsat})\ then\ I_{hh} = -I_{hhsat},$$

where: $K_{ivv}, K_{ivh}, K_{ihv}, K_{ihh}$ are gains of the I parts,
and $I_{vvsat}, I_{vhsat}, I_{hvsat}, I_{hhsat}$ are the saturation levels of the integrators.

5.3. STATE FEEDBACK CONTROLLER

The structure of the SF controller is shown in Figure 5-2.

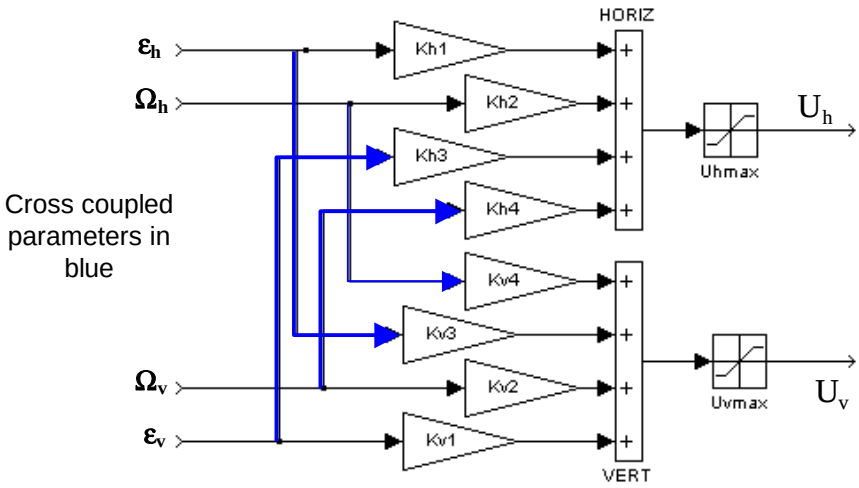

Figure 5-2: Structure of the State Feedback (SF) controller

The control outputs from the SF controller are calculated according to the following formulas:

$$U_v = K_{v1}\varepsilon_v + K_{v2}\Omega_v + K_{v3}\varepsilon_h + K_{v4}\Omega_h, \quad \text{for} \quad -U_{v\max} \le U_v \le U_{v\max} \quad \textit{subject to}$$

$$if\,(U_v > U_{v\max})\ then\ U_v = U_{v\max}, \quad if(U_v < -U_{v\max})\,then\,U_v = -U_{v\max},$$

$$U_h = K_{h1}\varepsilon_h + K_{h2}\Omega_h + K_{h3}\varepsilon_v + K_{h4}\Omega_v, \quad \text{for} \quad -U_{h\max} \le U_h \le U_{h\max} \quad \textit{subject to}$$

$$if\,(U_h > U_{h\max})\ then\,U_h = U_{h\max}, \quad if\,(U_h < -U_{h\max})\ then\,U_h = -U_{h\max},$$

$$\varepsilon_v = \alpha_{vd} - \alpha_v,$$

$$\varepsilon_h = \alpha_{hd} - \alpha_h,$$

where: $\varepsilon_v, \varepsilon_h$ are the errors of vertical and horizontal angles,
α_{vd}, α_{hd} are the desired values of vertical and horizontal angle,
α_v, α_h are the vertical and horizontal angles,
Ω_v, Ω_h are the angular velocities with respect to the vertical and horizontal axes,
$K_{v1}, \ldots, K_{v4}, K_{h1}, \ldots, K_{h4}$ are the parameters of the controller,
$U_{v\max}, U_{h\max}$ are the saturation limits of the vertical and horizontal controls.

5.4. LQ- CONTROLLER

The structure of the LQ controller is shown in Figure 5-3.

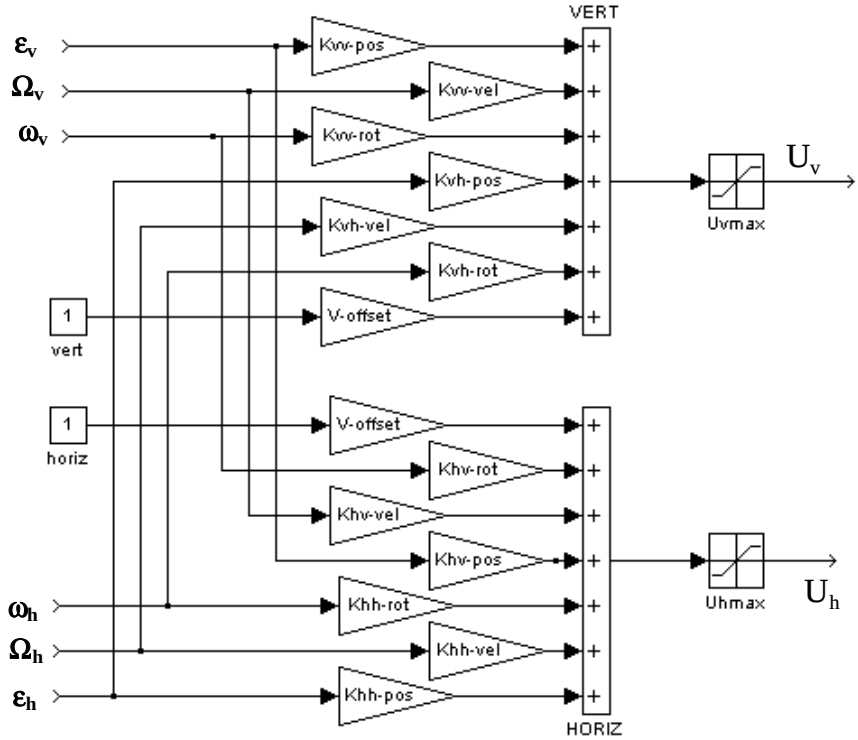

Figure 5-3: Structure of LQ controller

The control outputs from the SF controller are calculated according to the following formulas:

$$\varepsilon_v = \alpha_{vd} - \alpha_v,$$

$$\varepsilon_h = \alpha_{hd} - \alpha_h,$$

$$U_v = \begin{array}{l} K_{vv-pos}\varepsilon_v + K_{vv-vel}\Omega_v + K_{vv-rot}\omega_v + \\ + K_{vh-pos}\varepsilon_h + K_{vh-vel}\Omega_h + K_{vh-rot}\omega_h + V_{offset} \end{array}, \quad \text{for } -U_{v\max} \le U_v \le U_{v\max}$$

$$if\ (U_v > U_{v\max})\ then\ U_v = U_{v\max},\ if\ (U_v < -U_{v\max})\ then\ U_v = -U_{v\max},$$

$$U_v = \begin{array}{l} K_{hh-pos}\varepsilon_h + K_{hh-vel}\Omega_h + K_{hh-rot}\omega_h + \\ + K_{hv-pos}\varepsilon_v + K_{hv-vel}\Omega_v + K_{hv-rot}\omega_v + H_{offset} \end{array}, \quad \text{for } -U_{h\max} \le U_h \le U_{h\max}$$

$$if\ (U_h > U_{h\max})\ then\ U_h = U_{h\max},\ if\ (U_h < -U_{h\max})\ then\ U_h = -U_{h\max},$$

where: $\varepsilon_v, \varepsilon_h$ are the errors of the vertical and horizontal angles,

α_{vd}, α_{hd} are the desired values of the vertical and horizontal angles,

α_v, α_h are the actual vertical and horizontal angles,

Ω_v, Ω_h are the angular velocities with respect to the vertical and horizontal axes,

ω_v, ω_h are rotational accelerations with respect to the vertical and horizontal axes

$K_{vv-pos}, K_{vv-vel}, K_{vv-rot}, K_{vh-pos}, K_{vh-vel}, K_{vh-rot}$ $K_{hh-pos}, K_{hh-vel}, K_{hh-rot}, K_{hv-pos}, K_{hv-vel}, K_{hv-rot}$ are the linear quadratic controller parameters,

$U_{v\max}, U_{h\max}$ are saturation limits of the vertical and horizontal controls,

H_{offset} and V_{offset} are constant offsets added to the appropriate controls.

5.5. TUNING OF PARAMETERS

There are 20 parameters of the controllers stored in RTK in a vector form.

There are 18 parameters of the PID controllers and 10 parameters of the SF controllers to be tuned. All parameters have their default values. To invoke the tuning parameter window double click on the *Control Parameters* block in the *Main Control Window*. The current value of each parameter is visible in the window. You can simply change its value by dragging the corresponding slider or writing a new numerical value in the edit window.

Default values of the controller parameters can be set in the appropriate mask of the *Real Time Task* block for each experiment.

5.5.1. Tuning of PID controller parameters.

To tune the PID parameters double click on the ***PID Controller Parameters*** block window in the Main Control Window. The following window opens (Figure 5-4):

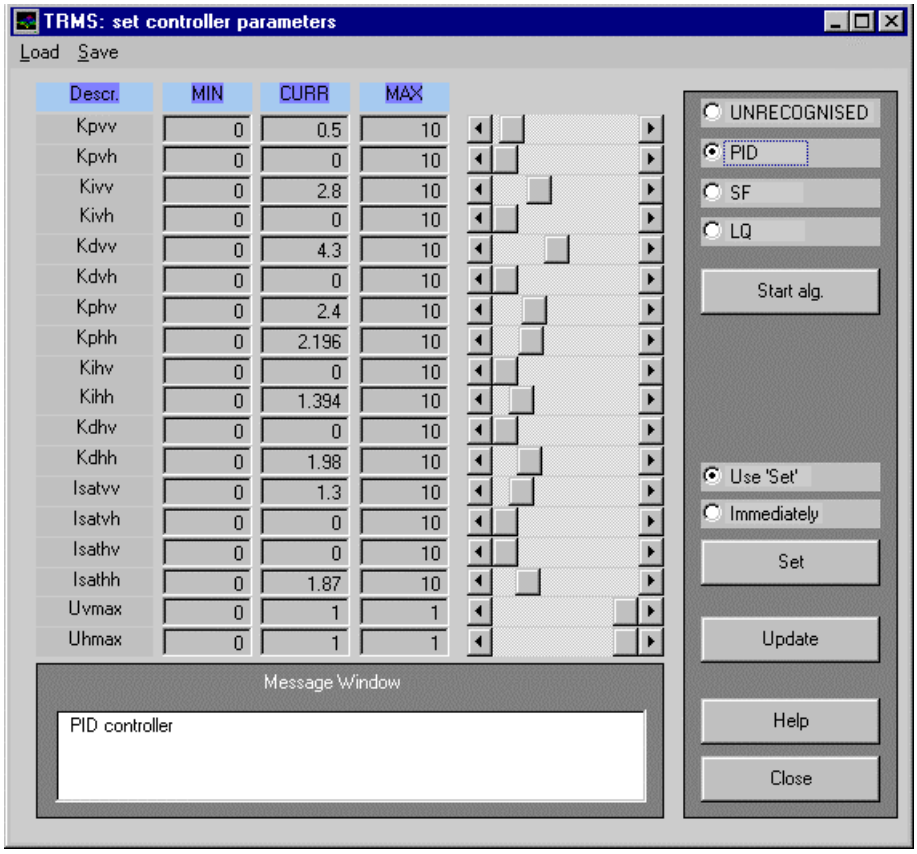

Figure 5-4: Controller parameters window - PID controller selected

The meaning of the parameters is explained in Table 4.1 below.

K_{pvv}	proportional coefficient for PID_{vv}	K_{ihh}	integration coefficient for PID_{hh} ($1/Ti_{hh}$)
K_{pvh}	proportional coefficient for PID_{vh}	K_{dhv}	derivative coefficient for PID_{hv}
K_{ivv}	integration coefficient for PID_{vv} ($1/Ti_{vv}$)	K_{dhh}	derivative coefficient for PID_{hh}
K_{ivh}	integration coefficient for PID_{vh} ($1/Ti_{vh}$)	I_{vvsat}	integration limit for PID_{vv}
K_{dvv}	derivative coefficient for PID_{vv}	I_{vhsat}	integration limit for PID_{vh}
K_{dvh}	derivative coefficient for PID_{vh}	I_{ihvsat}	integration limit for PID_{hv}
K_{pvh}	proportional coefficient for PID_{vh}	I_{hhsat}	integration limit for PID_{hh}
K_{phh}	proportional coefficient for PID_{hh}	U_{vmax}	limit of control voltage in vertical plane - $\in$ (0,1)
K_{ihv}	integration coefficient for PID_{hv} ($1/Ti_{hv}$)	U_{hmax}	limit of control voltage in horizontal plane - $\in$ (0,1)

Table 4.1: PID Control Parameters

The Selected parameters can be changed by dragging the sliders or by typing new values in the appropriate dialogue box.

The rules for using the *Controller parameters* window have already been described in Section 3.2.

5.5.2. Tuning of parameters for the State Feedback controller

To tune the SF controller parameters, double click on the ***State Feedback Controller Parameters*** block in the Main Control Window. The following window opens (Figure 5-5):

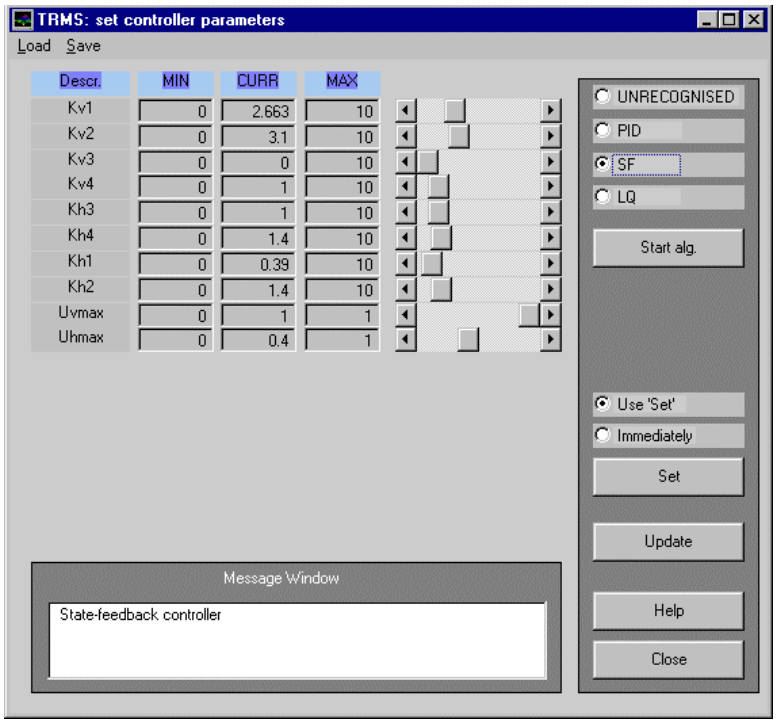

Figure 5-5: Controller Parameters window - state feedback selected

The operations in this window are similar to those described previously.

5.5.3. Tuning of parameters for LQ controller

To tune LQ controller parameters set the LQ radio-button in the *Controller Parameters* window. The following window opens (Figure 5-6):

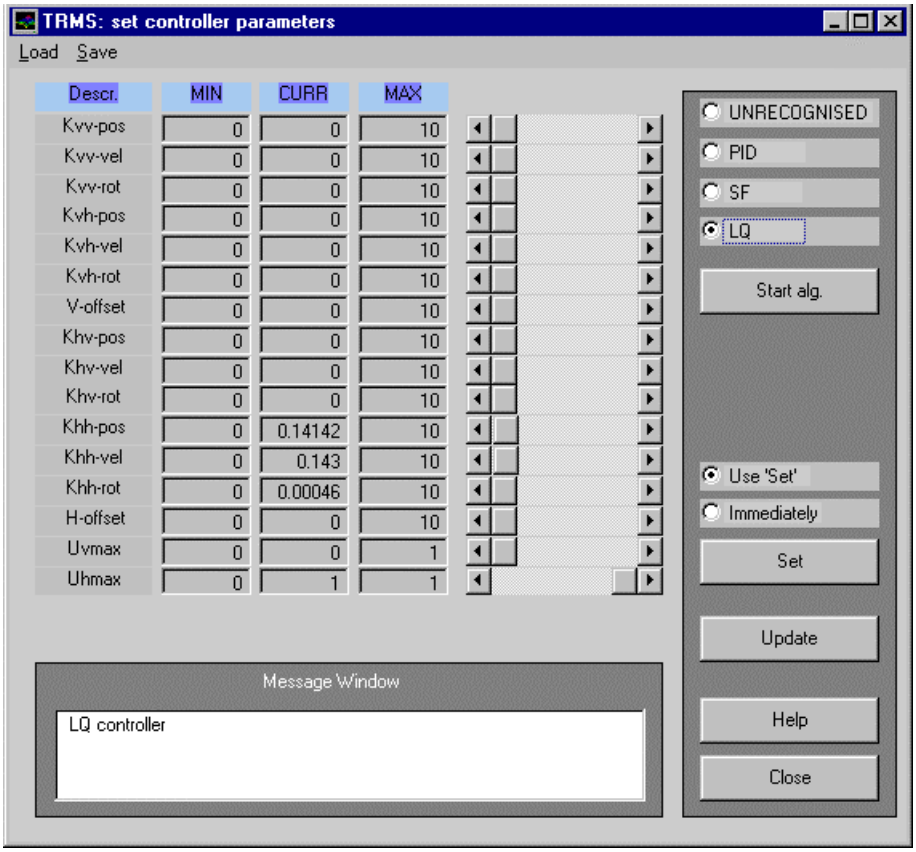

Figure 5-6: *Controller parameters* window - LQ controller selected

The operations in this window are similar to those described previously.

5.5.4. Setting of the default values of the parameters.

Default values of controller parameters can be set using the mask of the *Real Time Task* block in appropriate experiments . For experiments with the PID controllers (*PID controller - tracking mode* and *PID controller - stabilisation mode)* the mask of *the Real Time Task* has the characteristics as shown in Figure 5-7. The set of values from the mask is stored in the RTK as a default.

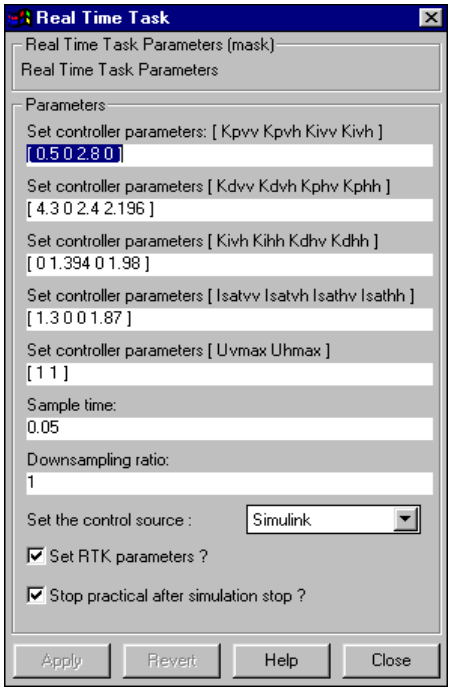

Figure 5-7: Mask of *Real Time Task* in PID cases.

Figure 5-8a and Figure 5-8b show the masks of the ***Real Time Task*** for the *State Feedback* and the *LQ controllers*.

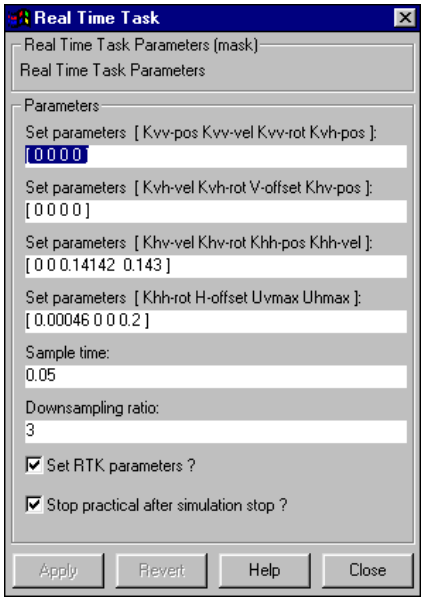

Figure 5-8 (a)

Mask of *Real Time Task in the SF Case*

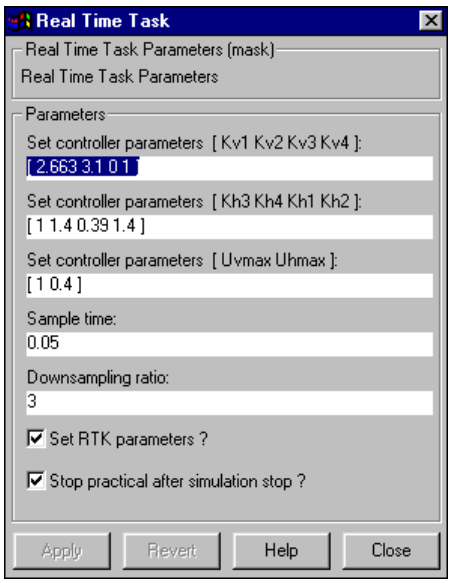

(b)

Mask of *Real Time Task* in the LQ case

The parameters are transferred from the masks to RTK after clicking the *Simulation/Start* button in the appropriate Simulink model window.

6. Practicals

In this Chapter introductory experiments with TRMS are described.

There are three kinds of experiments:

Open loop control.
In this case you can familiarise yourself with responses of the system for different control inputs. Control inputs are voltages supplied to the DC-motors driving the propellers. You can also mechanically block the motion of the beam in the selected plane and study the behaviour of the system.

Stabilising control.
The goal of the control is to move the system from an initial position (pitch and azimuth) to another position and stabilise it there.

Tracking control.
The system is steered to follow a desired trajectory.

The last two goals are achieved by means of appropriately chosen controllers. The user can chose between two kinds of PID and state feedback controllers. Experiments of all three kinds are similar but for instructive reasons we shall describe all experiments in detail.

Starting experiments

To start any experiment type ***hl*** in the MATLAB command window.

Then the *Main Control Window* opens - Figure 2-1.

6.1. OPEN LOOP CONTROL.

We start with a simple experiment to become more familiar with the graphical SIMULINK interface. Double click on the ***Open Loop Control*** block in the Main Control Window. The window in Figure 6-1 appears.

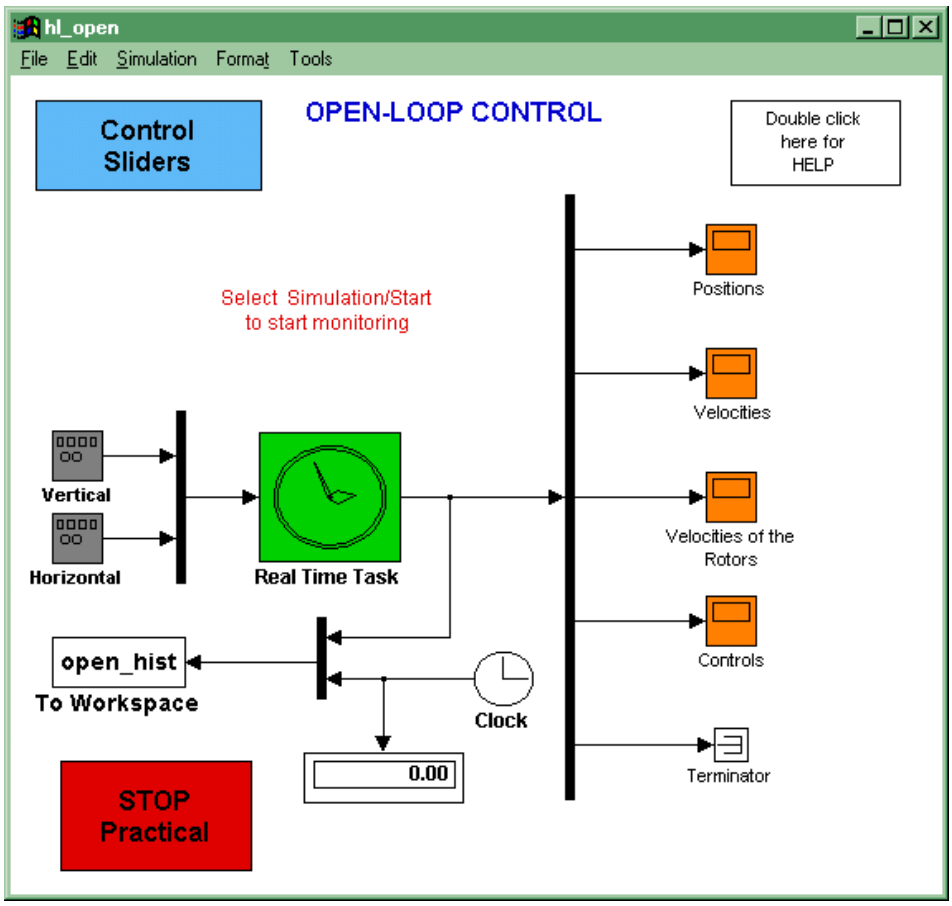

Figure 6-1: *Open loop Control* window

You can configure this screen by opening or closing scopes, and moving or changing their dimensions. Double click on the ***Control Sliders*** block and now you are able to change the reference value of the vertical and horizontal controls by dragging the sliders.

To begin the practical click *Simulation,* and then *Start* in the window menu. Recall the control sliders (they are in the background) . Set the slider control for the vertical rotor to the right hand side (Figure 6-2).

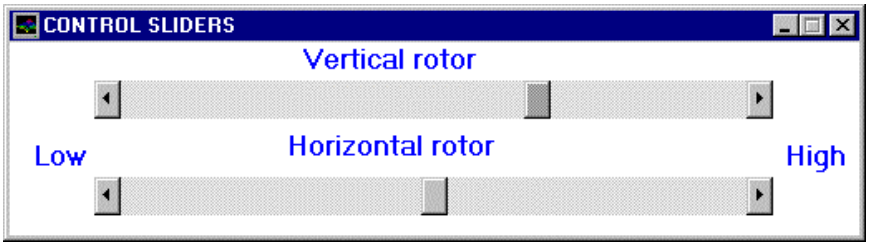

Figure 6-2: Control Sliders

The beam begins to move up. If you double click an appropriate scopes you can observe the results of such an experiment (Figure 6-3). In this experiment you can, for example, identify moments of inertia in the vertical or horizontal plane.

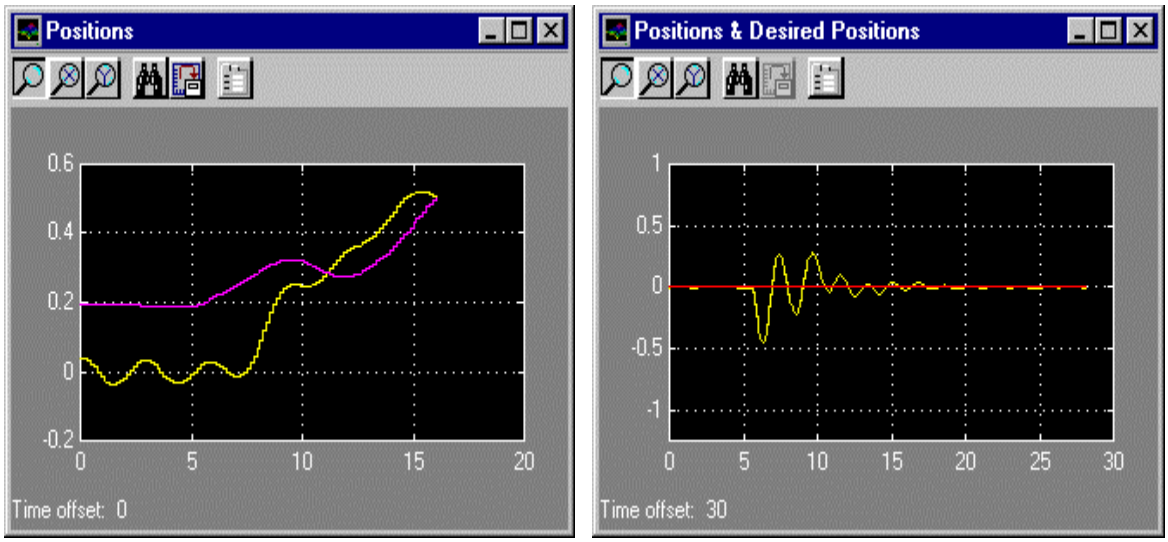

Figure 6-3: First experiment - open-loop control

Without stopping the experiment, the control values can also be changed using the mouse. To do it double click on the *Use Mouse to Control* block in the *Main Control Window* during the experiment.

The window in Figure 6-4 appears.

Next select the *Control* or *Reference value* radio-button . The first one enables you to set control values directly to the input of the system (this radio-button sets the open-loop control mode automatically). The second button allows you to set the desired position values, but in this case closed-loop control mode must be set up beforehand.

Note that you can refer to the *Use Mouse to Control* block during any experiment.

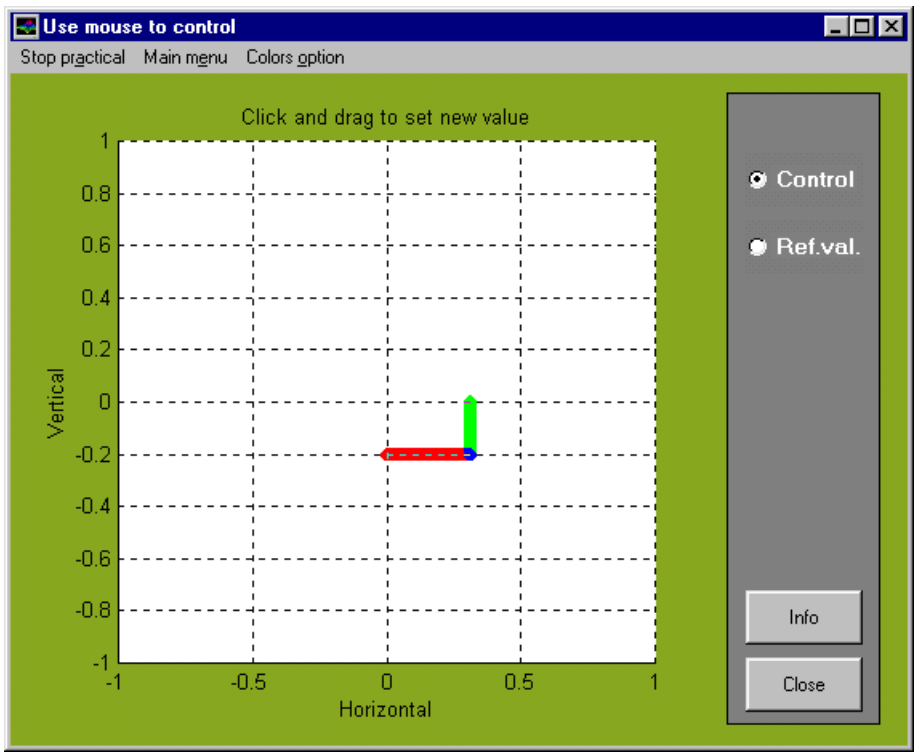

Figure 6-4: The *Use mouse to control* screen

6.2. 1-DOF STABILISING CONTROLLERS

The task of the one-degree-of-freedom (1-DOF) stabilising controllers is to move the TRMS to an arbitrary position in the selected plane and to stabilise it there.

6.2.1. Vertical 1-DOF stabilisation

At the beginning we restrict our control objective to stabilising the system in the vertical plane only (by tightening the ***vertical axis locking screw*** shown in Figure 6-5).

We reduce the original system to the 1-DOF system by mechanically blocking its freedom to move in the horizontal plane. A corresponding block diagram of the PID control system is shown in Figure 6-8.

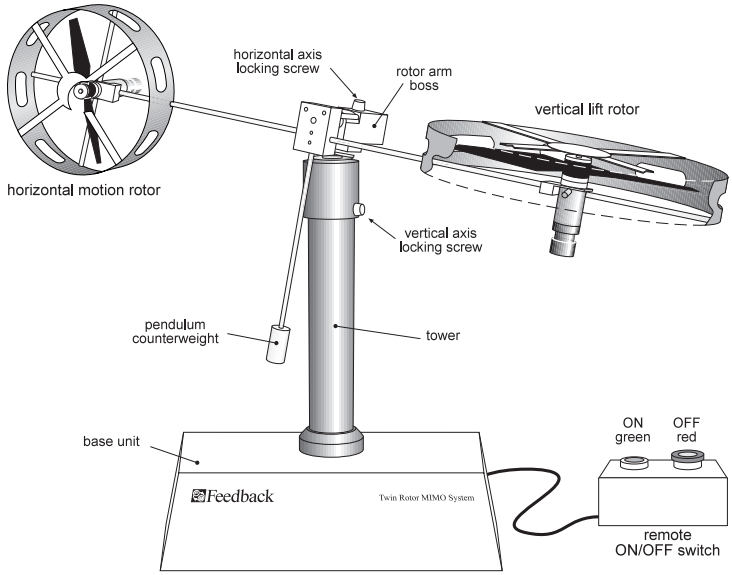

Figure 6-5: TRMS vertical and horizontal locking screws

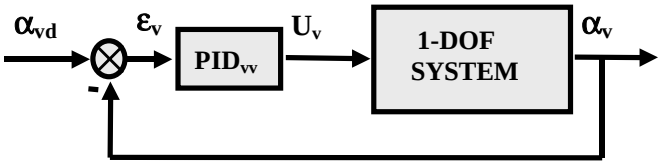

α_{vd} - desired position on vertical plane

Figure 6-6: 1-DOF control system (vertical stabilisation)

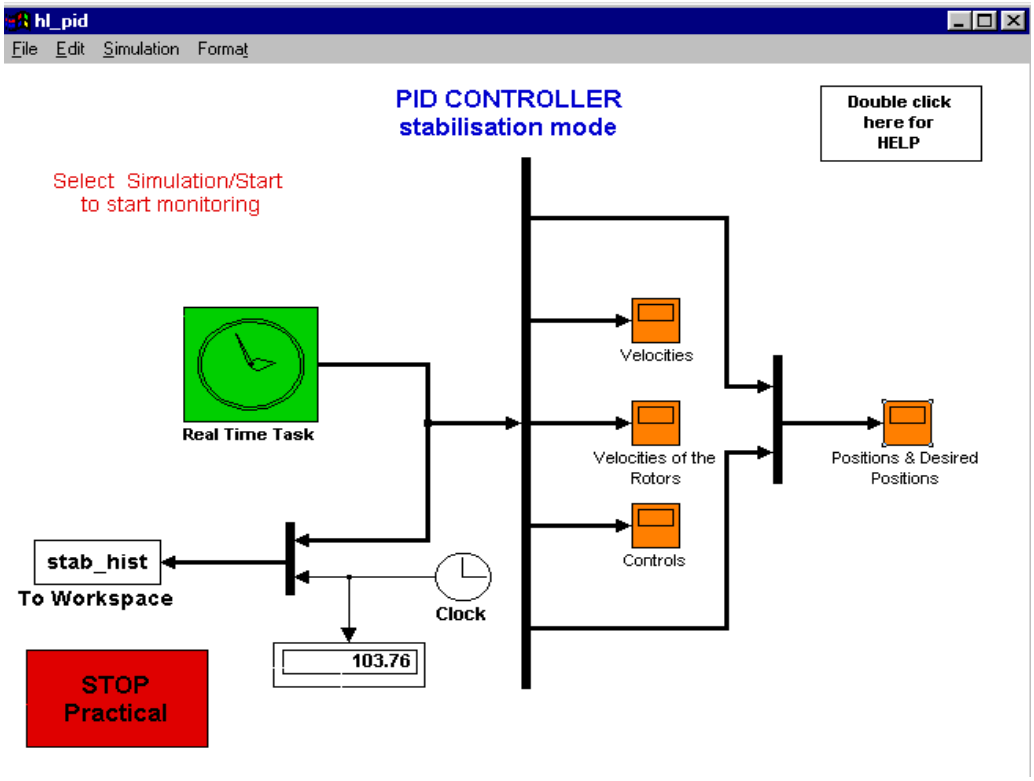

Figure 6-7: PID Stabilising Controller

The block diagram below shows the system in a more detailed form (Figure 6-8). Notice that only the vertical part of the control system is considered.

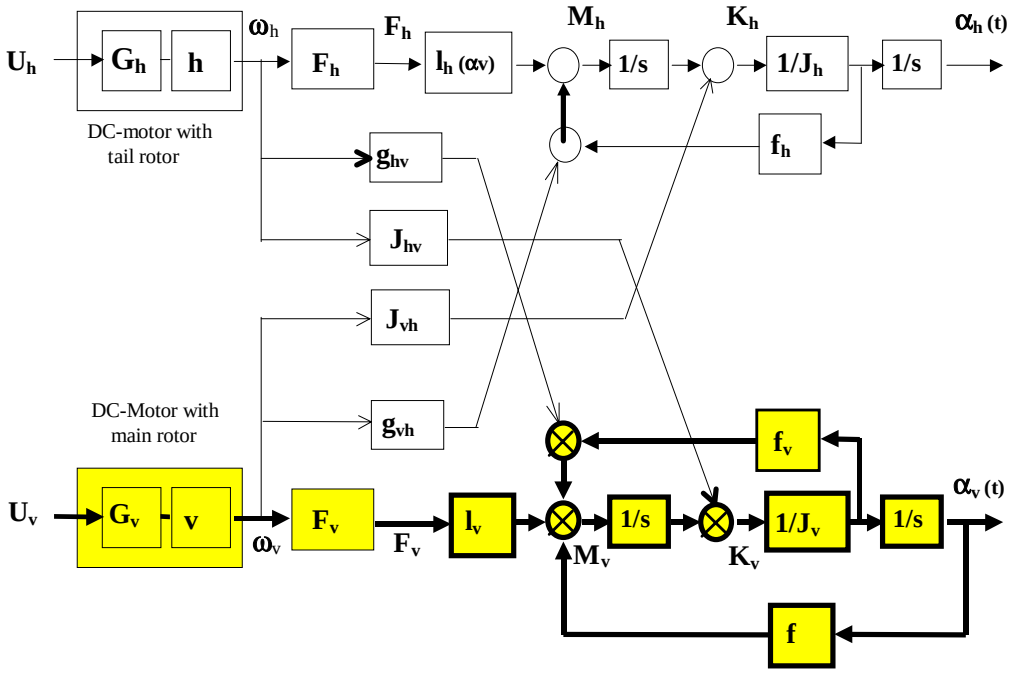

Figure 6-8: The 1-DOF system (vertical plane) block diagram

To carry out the experiment go through the following steps:

- fix the TRMS in the horizontal plane (see Figure 6-5) and set it in the neutral vertical position,
- click the *Reset Encoders* block,
- double click the *PID Controller Stabilisation Mode* block in *the Main Control Window* - The window shown in Figure 6-7 appears,
- click the *Simulation/Start* button in the upper menu,
- double click the *Controller Parameters* block (described in Section 5.4.1). Note that the PID radio-button is selected,
- set the appropriate parameters, shown below in Table 6-1: Notice that several of the parameters have to be set to zero and only parameters with a 'vv' subscript are active in this case. Other parameters retain their default values. They can be tuned during the experiment.

K_{pvv}	active e.g. 0.38	**K_{pvh}**	set zero	I_{vvsat}	active e.g. 1.3
K_{pvh}	set zero	**K_{phh}**	set zero	I_{vhsat}	set zero
K_{ivv}	active e.g. 2.2	**K_{ihv}**	set zero	I_{hvsat}	set zero
K_{ivh}	set zero	**K_{ihh}**	set zero	I_{hhsat}	set zero
K_{dvv}	active e.g. 1.4	**K_{dhv}**	set zero	U_{vmax}	active e.g. 1.0
K_{dvh}	set zero	**K_{dhh}**	set zero	U_{hmax}	set zero !!

Table 6-1: PID control parameters settings

- Click on the ***Use mouse to control*** block in the *Main Control* window, click on the ***ref. Value*** button and set a non zero desired position in the vertical axis only.
- When the system is stabilised, push by hand the TRMS beam in the vertical plane and observe the behaviour of the system.
- Changing only the active parameters in the ***PID Controller Parameters*** block, observe their influence on the time response character of the system. Increasing K_{pvv}, find its critical value at which the system becomes unstable.

Typical results of the experiment are shown in Figure 6-9.

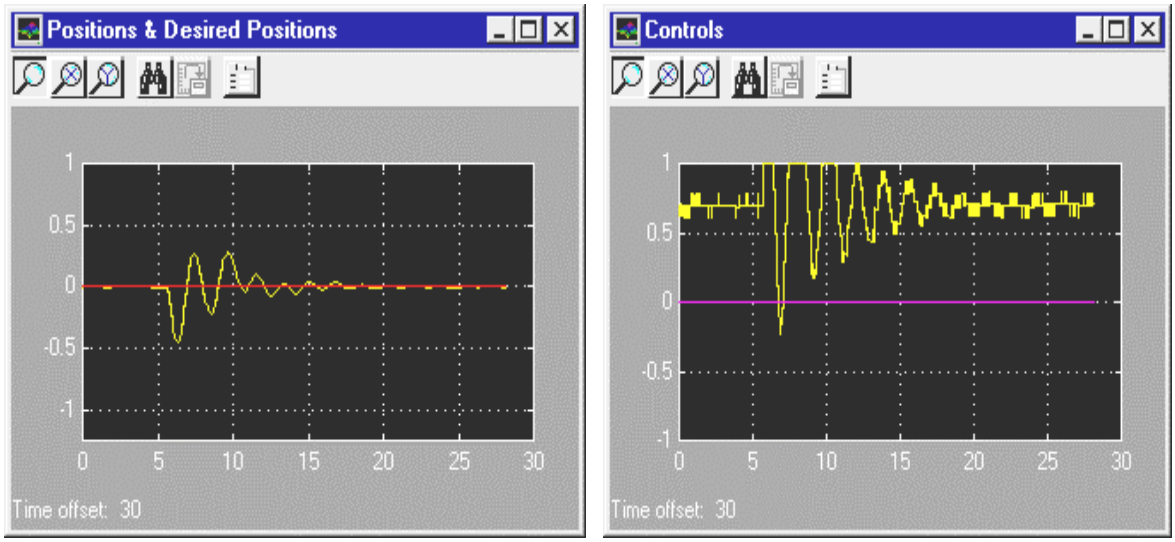

Figure 6-9: Experiment with 1-DOF PID stabilising controller

After setting the appropriate parameters of the controller you can change the desired position with the mouse to another desired position (using the *Use Mouse to Control* block, as described in Section 6.1).

6.2.2. Horizontal 1-DOF stabilisation

In the next experiment we will apply the stabilising PID controller in the horizontal plane.. We block the system in one axis so that it cannot move in the vertical plane (by tightening the appropriate screw as shown in Figure 6-5). A corresponding block diagram of the control system is shown in Figure 6-10, and in a more detailed form in Figure 6-11.

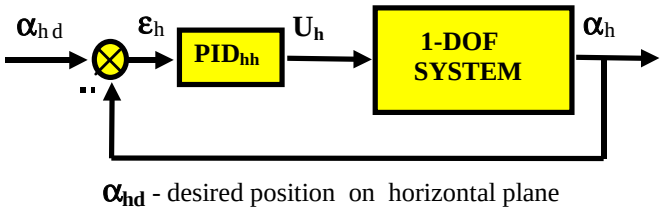

Figure 6-10: 1-DOF control system (horizontal stabilisation)

Notice that only the 'horizontal' part of the control system is considered.

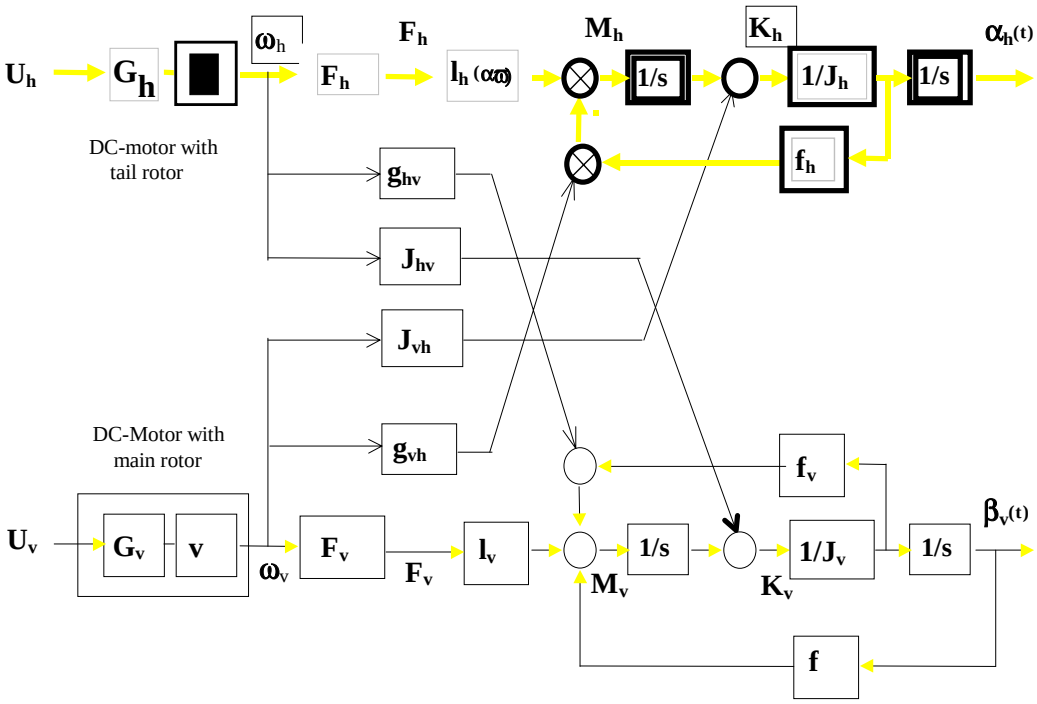

Figure 6-11: Block diagram of 1-DOF system (horizontal plane)

To carry out the experiment, go through the following steps:

- fix the TRMS beam in the vertical plane and set it in the neutral horizontal position,
- click the *Reset Encoders* block,
- double click the *PID Controller Stabilisation Mode* block in the *Main Control Window*. The window in shown in Figure 6-7 appears,
- click on *Simulation/Start* button in the upper menu,
- double click the *Controller Parameters* block (described in section 5.4.1),
- set the appropriate parameters as shown in Table 6-2: (example values of the parameters). Notice that several of the parameters have to be set to zero and only parameters with a 'hh' subscript are active in this case.

Table 6-2: (example values of the parameters)

K_{pvv}	set zero	**K_{pvh}**	set zero	**I_{vvsat}**	set zero
K_{pvh}	set zero	**K_{phh}**	**active** 1.98	**I_{vhsat}**	set zero
K_{ivv}	set zero	**K_{ihv}**	set zero	**I_{ihvsa}**	set zero
K_{ivh}	set zero	**K_{ihh}**	**active** 0.4	**I_{hhsat}**	**active** 0.198
K_{dvv}	set zero	**K_{dhv}**	set zero	**U_{vmax}**	**set zero !!**
K_{dvh}	set zero	**K_{dhh}**	**active** 3.246	**U_{hmax}**	**active** 1

- click the *Use Mouse to Control* block in the *Main Control Window*, click the *ref. Val* radio-button and set a non zero desired position in the horizontal axis only,
- when system is stabilised push the TRMS beam by hand in the horizontal plane, first in the one direction and after stabilisation in the opposite direction and observe the behaviour of the system,
- changing only the active parameters in the *Controller Parameters* block observe their influence on the character of time response of the system. Increasing K_{phh}, find its critical value at which the system becomes unstable.

Notice that you can obtain good results of stabilisation (steady-state error equal to zero) without using the I-part of the controller. This is because of the astatic properties of the system in the horizontal plane.

Typical results of the experiment described above are shown in Figure 6-12.

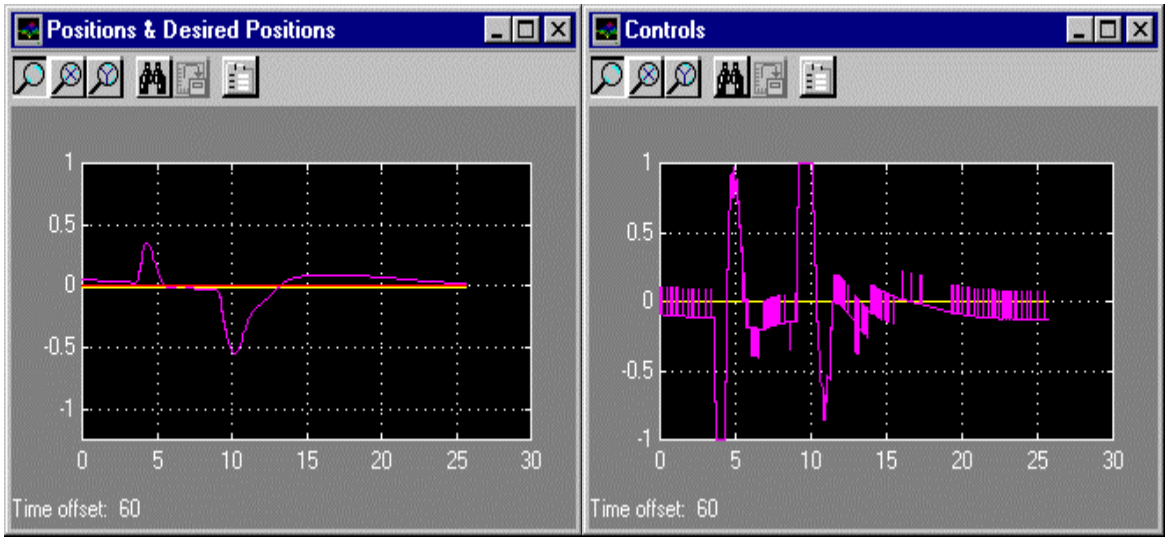

Figure 6-12: Experiment with 1-DOF PID stabilising controller

After setting the appropriate parameters of the controller you can change the desired position with the mouse (using the *Use Mouse to Control* block, as described in Section 6.1).

6.3. 2-DOF STABILISING CONTROLLERS

The task in this case is the same as in the previous sections but TRMS is not mechanically blocked, and therefore it is free to move in both planes.

6.3.1. Simple PID controller

The simple PID controller controls the vertical and horizontal movements separately. In this control system influence of one rotor on the motion in the other plane is not compensated by the controller structure. The system is not de-coupled. The control system of this kind is shown in Figure 6-13. The controller structure is shown in Figure 6-14.

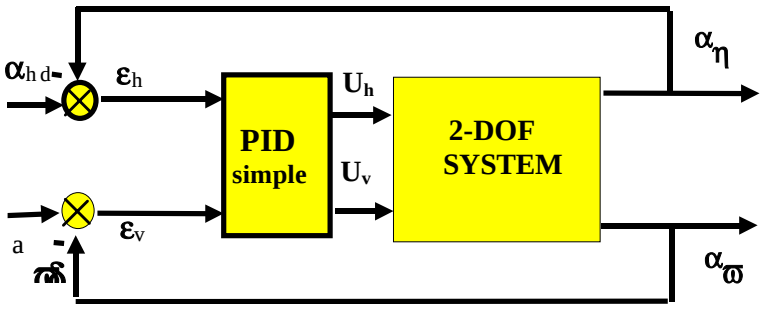

Figure 6-13: Block diagram of a 2-DOF control system with a simple PID-controller

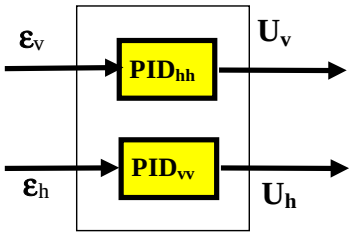

Figure 6-14: Block diagram of a simple PID-controller

To carry out the experiment carry out the following steps:

- double click the *PID* block as described in Section 5.4.1. i.e. the Controller Parameters window
- set the appropriate parameters as shown in Table 6-3. Notice, that only the parameters with 'hh' and 'vv' subscripts are active in this case, as the cross coupled parameters are set to zero.
- double click the *PID Controller Stabilisation Mode* block in the *Main Control Window*. The window shown in Figure 6-7 appears,
- click the *Simulation/Start* button in the upper menu,
- click *Set* button in the *Controller Parameters* window. From this time system works with the appropriate set of parameters,
- click the *Use Mouse to Control* block in the *Main Control Window*, click the *ref. Val.* radio-button and set a non-zero desired position ,
- when the system is stabilised push the TRMS beam by hand and observe the behaviour of the system,
- changing only the active parameters in the *Parameters of the Controller PID* block try to minimise interaction between motion in both planes of the "non-blocked" system.

Table 6-3: (example values of the parameters)

K_{pvv}	**active** 0.5	**K_{pvh}**	set zero	I_{vvsat}	**active** 1.3
K_{pvh}	set zero	**K_{phh}**	**active** 2.196	I_{vhsat}	set zero
K_{ivv}	**active** 2.8	**K_{ihv}**	set zero	I_{ihvsa}	set zero
K_{ivh}	set zero	**K_{ihh}**	**active** 1.394	I_{hhsat}	**active** 1.87
K_{dvv}	**active** 4.3	**K_{dhv}**	set zero	U_{vmax}	**active** 1.0
K_{dvh}	set zero	**K_{dhh}**	**active** 1.98	U_{hmax}	**active** 1.0

Typical results of an experiment with the PID-simple controller are shown in Figure 6-15.

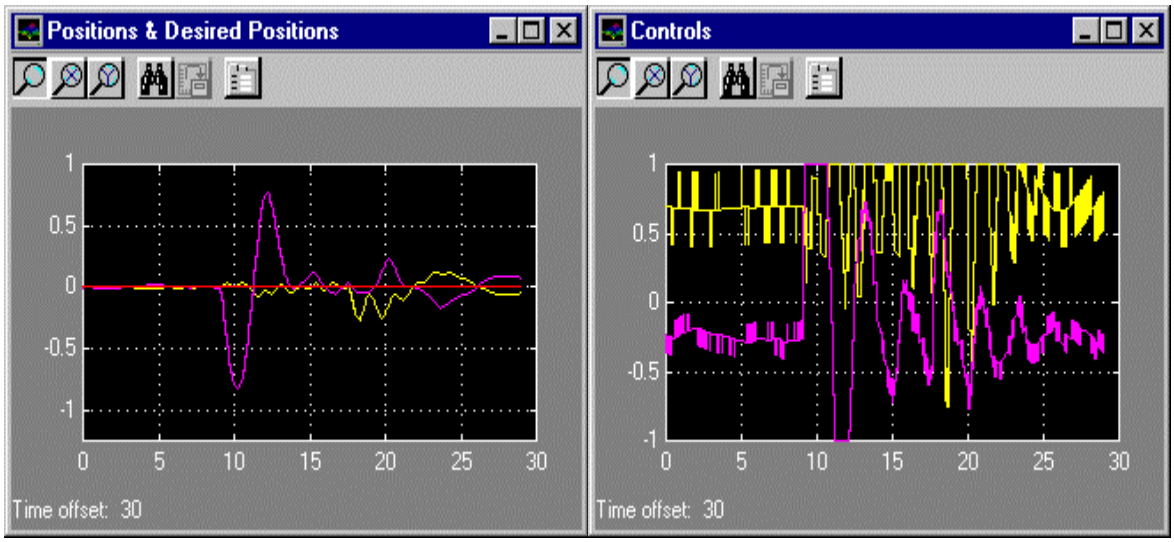

Figure 6-15: Experiment with 2-DOF PID stabilising controller

After setting the appropriate parameters of the controller you can change the desired position with the mouse (using the *Use mouse to control* block, as described above).

You can observe a strong interaction between horizontal and vertical motions.

6.3.2. Cross-coupled PID

The cross-coupled PID controller controls the system in the vertical and horizontal planes. In this control system influence of one rotor on the motion in the other plane can be compensated by the cross-coupled structure of the controller. The control system is shown in Figure 6-16. The cross-coupled PID controller structure is shown in Figure 6-17.

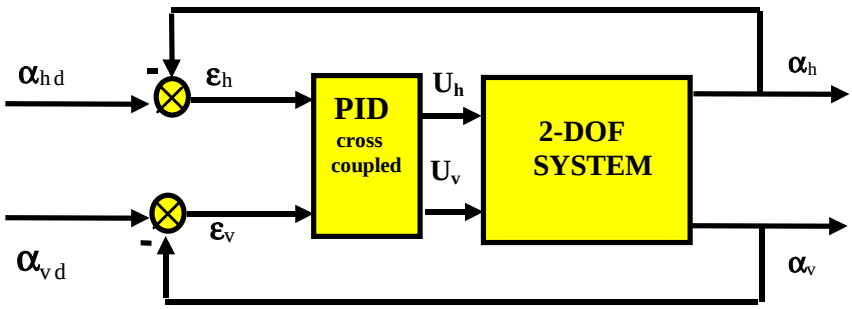

Figure 6-16: Block diagram of 2-DOF control system with cross-coupled PID-controller

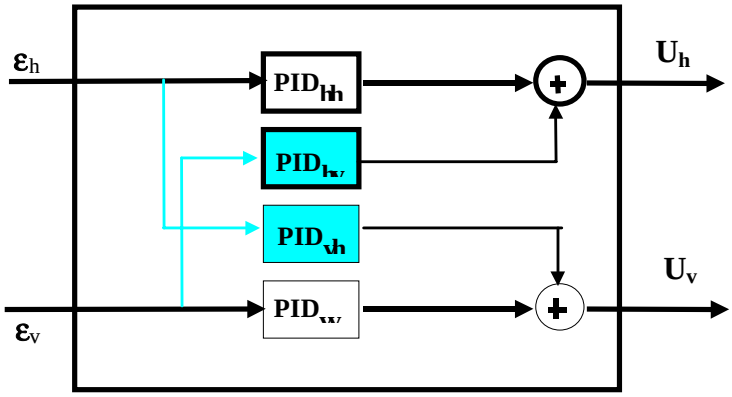

Figure 6-17: Block diagram of the cross-coupled PID-controller

To carry out the experiment, go through the following steps:

- double click the *Controller Parameters* block (described in section 5.4.1),
- set the appropriate parameters. All parameters are active in this case,
- double click the *PID Controller Stabilisation Mode* block in the *Main Control Window*. The window shown in Figure 6-7 appears,
- click the *Simulation/Start* button in the upper menu,
- click *Set* button in the *Controller Parameters* window. From this time system works with the appropriate set of parameters,
- click the *Use Mouse to Control* block in the *Main Control Window*, click on the *ref. Val.* radio-button and set a non-zero desired position ,
- when system is stabilised push by hand the TRMS beam horizontal plane and observe the behaviour of the system,
- changing parameters in the *Controller Parameters* block observe their influence on the character of time response of the system and its stability. You can try (by changing parameters of the controller) to minimise the interaction between the motion in the horizontal and vertical planes.

The results of an experiment with the PID-cross-coupled controller are shown in Figure 6-18.

After setting the appropriate parameters of the controller you can change the desired position with the mouse (using the *Use mouse to control* block, as described in Section 6.1).

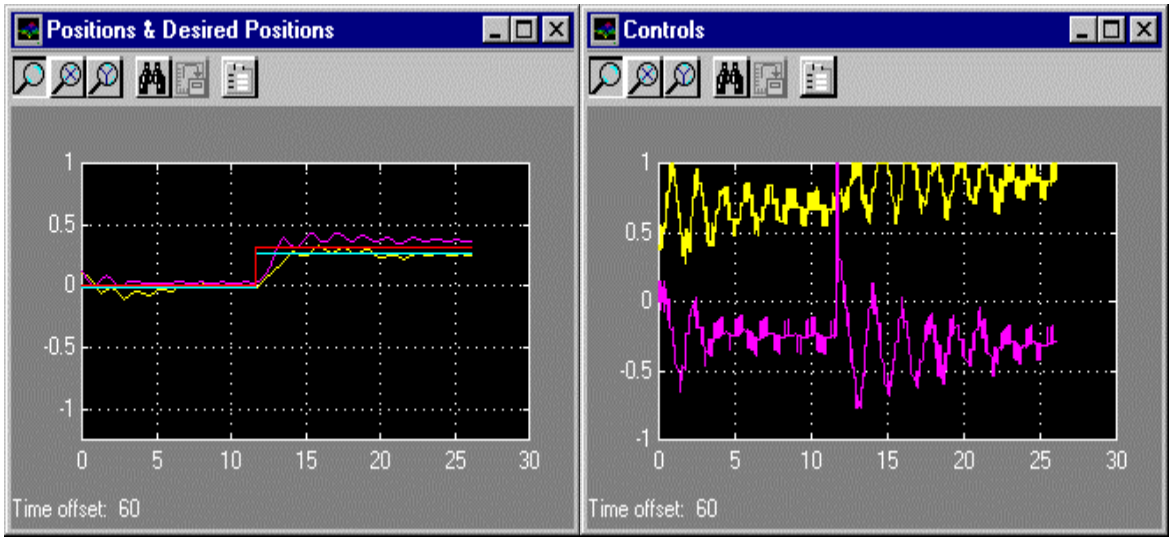

Figure 6-18: Experiment with 2-DOF cross-coupled PID controller

6.4. TRACKING CONTROLLERS

In those experiments a desired trajectory of the TRMS is set by use of an external excitation source.

6.4.1. Simple PID controller

The simple PID controller controls motion in the vertical and horizontal planes separately. The interaction between them is not compensated by the controller structure. The system is not de-coupled. The block diagram of the control system is shown in Figure 6-19. The controller structure was presented in Figure 6-14.

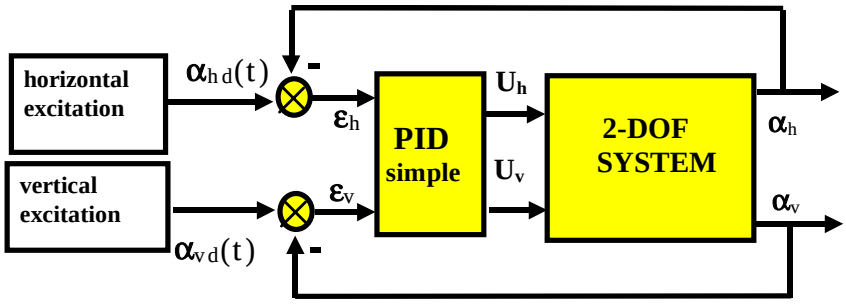

Figure 6-19: Block diagram of 2-DOF tracking control system with simple PID-controller

To carry out the experiment go through the following steps:

- double click the *PID Controller Tracking Mode* block in the Main Control Window. The window from Figure 3-4 appears,
- click on the *Simulation/Start* button in the upper menu,
- double click the *Controller Parameters* block,
- set the appropriate parameters as was given in Table 6.3. Notice, that only parameters with 'hh' and 'vv' subscripts are active in this case.
- observe their influence on the character of time response of the system. Increasing K_{vv} find its critical value at which the system becomes unstable.

Changing only the active parameters in the *Controller Parameters* block you can study the behaviour of the „non-blocked" TRMS system. After setting the appropriate parameters of the controller you can change the desired trajectory using the appropriate Simulink generator block.

The results of an experiment with the PID-simple tracking controller are given in Figure 6-20.

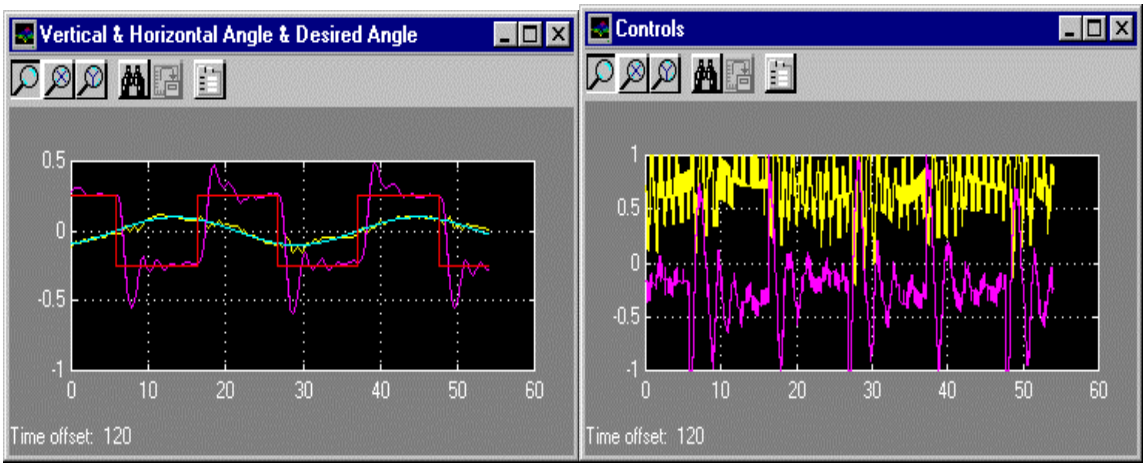

Figure 6-20: Experiment with 2-DOF simple PID tracking controller results

Interactions between horizontal and vertical motions can be observed. At the moment of a discontinuous change of vertical reference signal (it is a square wave) you can observe a disturbance of the horizontal position (which should track a sine wave).

6.4.2. Cross-coupled PID controller

The cross-coupled PID controller performs tracking control in the vertical and horizontal planes. In this control system interactions may be compensated by the controller with the cross-coupled structure. The control system is presented in Figure 6-21. The controller with the cross-coupled PID structure was presented in Figure 6-17. Notice that external generators (Simulink blocks) are used in this case as a source of the desired positions.

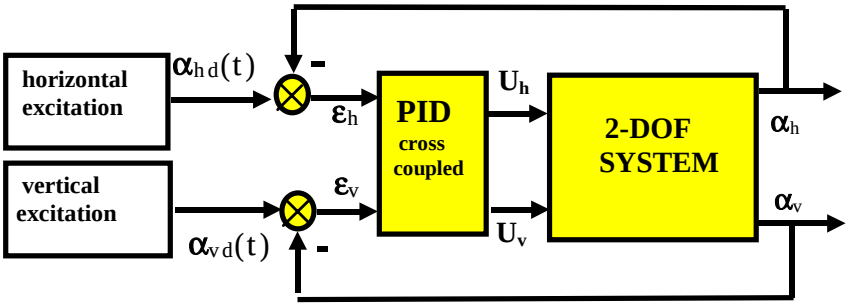

Figure 6-21: Block diagram of 2-DOF tracking control system with cross-coupled PID-controller

To carry out the experiment go through the following steps:

- double click the *PID Controller Tracking Mode* block in the *Main Control Window*. The window from Figure 3-4 appears,
- click the *Simulation/Start* button in the window menu,
- double click the *Controller Parameters* block,
- set the appropriate parameters. All the parameters are active in this case,
- changing parameters in the *Controller Parameters* block study the behaviour of the „non-blocked" TRMS with the cross-coupled controller.

Typical results of experiment with cross-coupled PID controller are given in Figure 6-22.

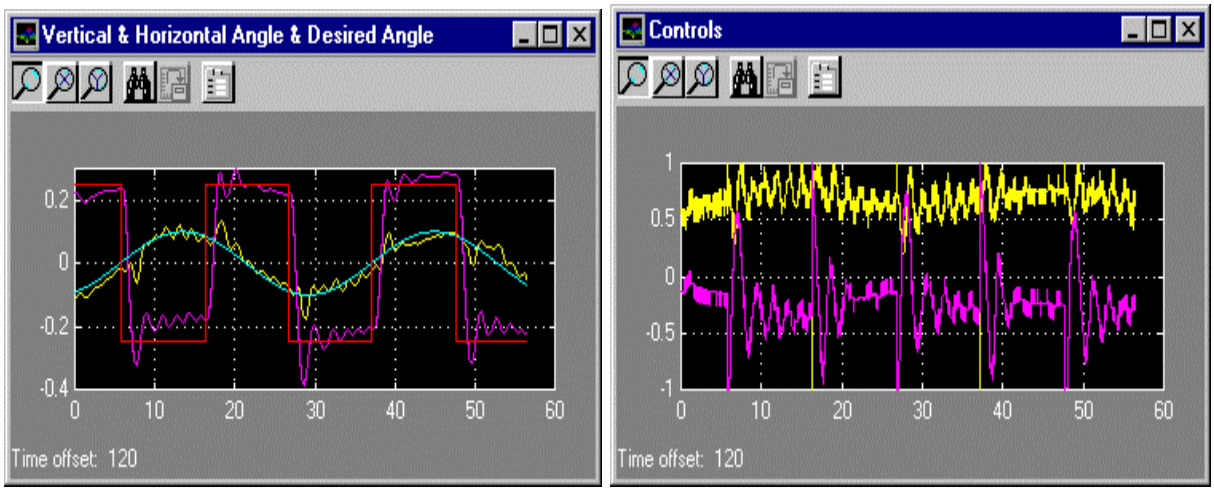

Figure 6-22: Experiment with 2-DOF cross-coupled PID tracking controller results

After setting the appropriate parameters of the controller you can change the desired trajectory using the appropriate Simulink generator block.

You can try to minimise the interactions between the motion in the horizontal and vertical planes by changing parameters of the controller.

6.5. STATE FEEDBACK CONTROLLER

The control system with the SF controller is shown in Figure 6-23. .The structure of the SF controller is shown in Figure 5-2.

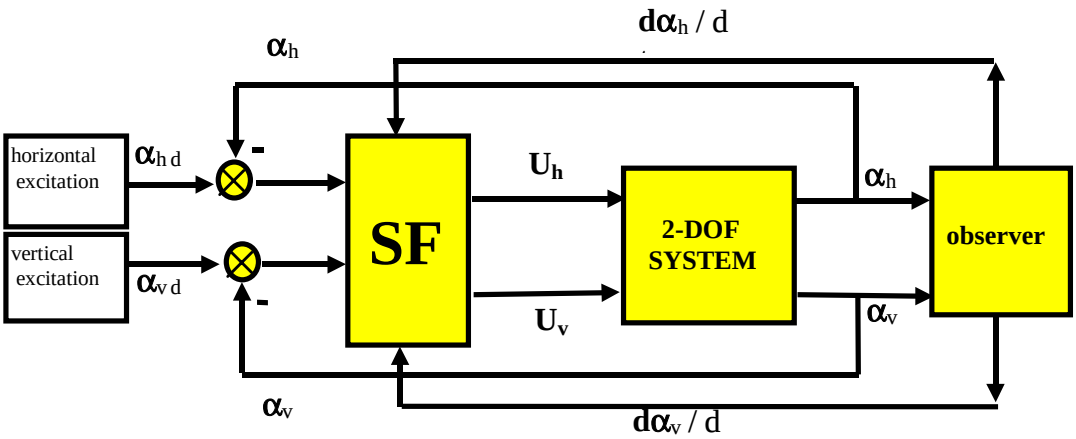

Figure 6-23: Block diagram of 2-DOF control system with SF controller

Notice, that the vertical and horizontal angular velocities are calculated in the ‘observer’ block (they cannot be measured directly).

To carry out the experiment go through the following steps:

- double click the *State Feedback Controller* block in the *Main Control Window*. The window similar to Figure 3-4 appears,
- click the *Simulation/Start* button in the upper menu,
- double click the *Controller Parameters* block. Note that SF radio-button is selected,
- set the appropriate parameters or use its default values,
- changing parameters in the *Controller Parameters* block study the behaviour of the TRMS with the SF controller.

The results of experiment with the SF controller are shown in Figure 6-24.

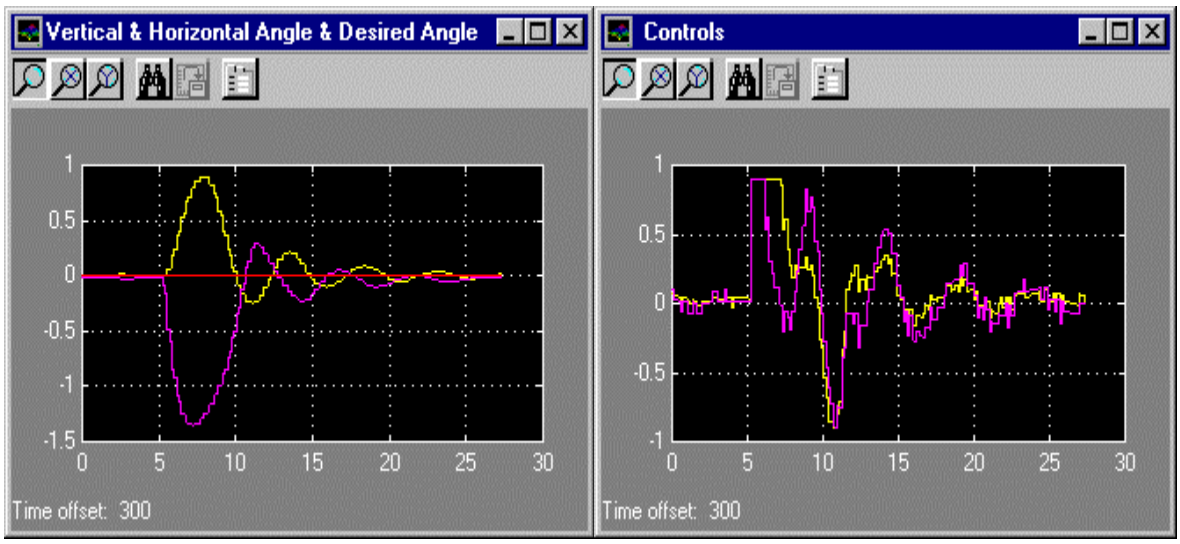

Figure 6-24: Results of experiment with SF controller

Notes

7. Filters

All TRMS measured signals are in discrete form. To smooth the stair shape of the signals digital filters should be used. It is essential, especially in the case of angular velocities of the beam which are not measured directly. They are calculated from angle values. As measured angles are in the discrete form, the resolution of the calculated angular velocities depends on the sample time (see the example in this section).

Generally, filtering is required when the resolution of the measured signal is too small for the applicable control algorithm, or when the algorithm is very sensitive to the error of the measured signal., In the case of some controller designs, (e.g. fuzzy or neural) the use of filters is particularly necessary.

Any filter enlarges the dynamics of the system by introducing its own and results in an extra delay of the output signal. Therefore, designing a filter includes a compromise between smoothing and delaying of the sampled filtered signal.

The filters prepared for the user applications are given below. The question how to set the parameters of a filter is open. One can go into details of the Kalman filtering theory or simply establish a set of filter parameters by experiment. A default filter parameter set is prepared for introductory experiments.

There are six filters available in RTK. They operate on the digital data describing the six state variables of the system.

- vertical angle of the beam,
- horizontal angle of the beam,
- vertical angular velocity of the beam,
- horizontal angular velocity of the beam,
- vertical rotor velocity,
- horizontal rotor velocity.

These filters are described by the following formula:

$$y(t) = a_0 x(t) + \sum_{i=1}^{8} a_i x(t - T_s i) + \sum_{i=1}^{8} b_i y(t - T_s i)$$

where: T_S - sampling period,

$x(t)$ - input to the filter,

$y(t)$ - output from the filter,

$a_0, a_1, \ldots, a_7, b_1, \ldots, b_7$ - filter parameters.

Example

After starting any experiment you can call history of it using the communication functions described in the TRMS Reference Guide – 33-007-2M5.

history=hl_call(GetHistory');

Then plot angle vs. time (Figure 7-1):

stairs(h(1,100:200)-h(1,100),h(3,100:200)); grid;

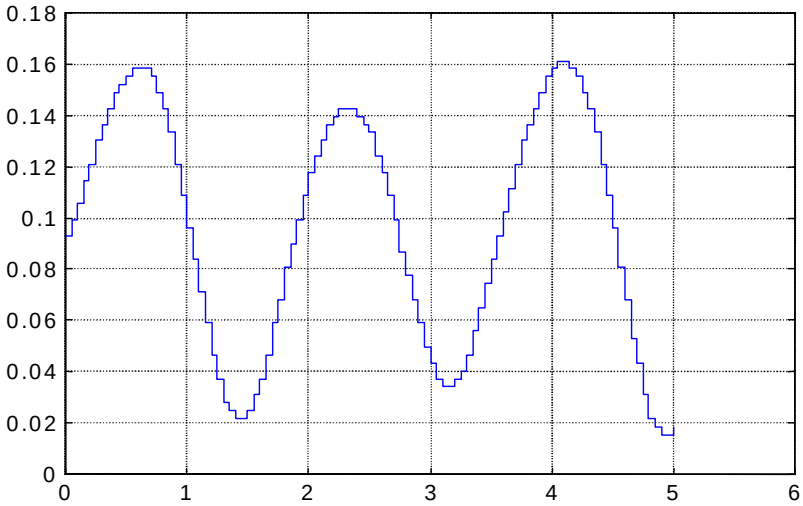

Figure 7-1: Angle vs. time history

Now plot horizontal velocity (Figure 7-2):

stairs(h(1,100:200)-h(1,100),h(5,100:200)); grid;

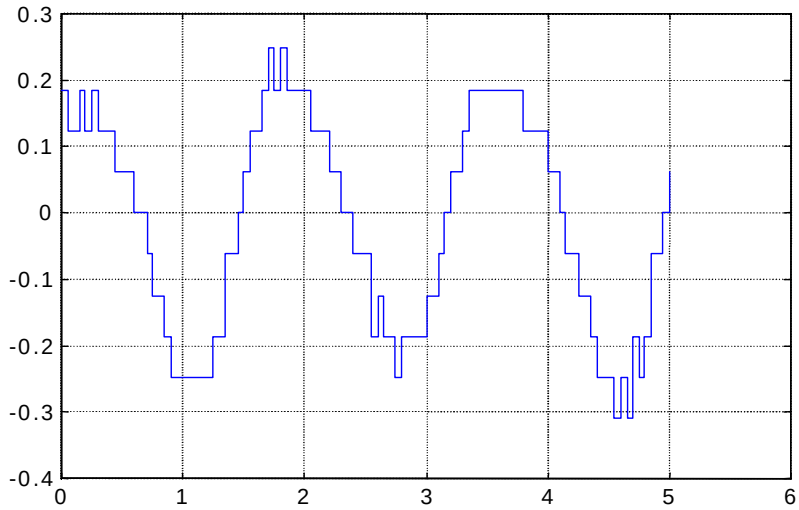

Figure 7-2: Horizontal velocity history

Note that the minimal difference between values of the non-filtered velocity is equal 0.61. This value can be found from the formula 2*pi / 2048 / sample_period.

In this case sample_period = 0.05.

Now design the filter:

a=zeros(1,9); a(1)=1;

b=ones(1,9)/8;

and perform data filtering:

yp=filter(b,a,h(3,:));

Now plot filtered velocity (Figure 7-3):

stairs(h(1,100:200)-h(1,100),yp(100:200)); grid;

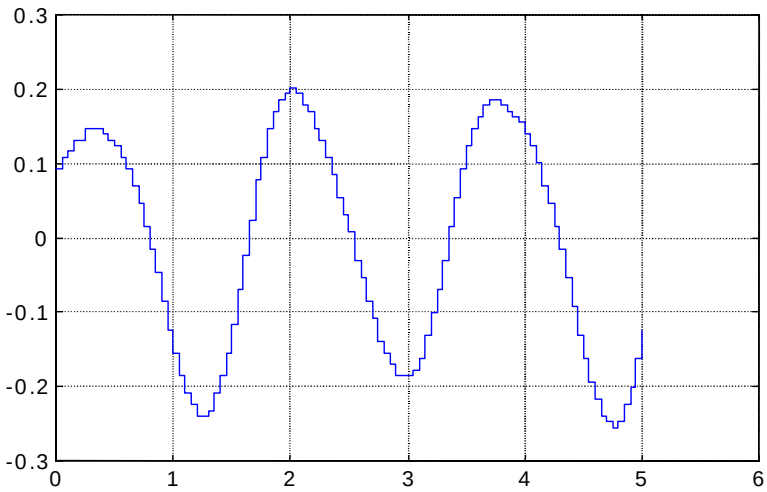

Figure 7-3: The filtered velocity

Notice that resolution of the observed velocity is about 0.01.

In this example the filter was design off-line. When you wish install the filter as a real-time task in RTK you can do it typing in the *MATLAB Command Window* :

hl_call('SetHorizSpeedFilt', [1/8 1/8 1/8 1/8 1/8 1/8 1/8 1/8 0; 0 0 0 0 0 0 0 0 0]);

See the Reference Guide – 33-007-2M5 for details.

Notes